CM, CME

Horizontal, multistage centrifugal pumps
60 Hz

be
think
innovate

GRUNDFOS

Table of contents

1. Applications 4

2. Product introduction 6
Introduction 6
Features and benefits 9

3. Performance range 11

4. Product range 12

5. Identification 13

6. Construction 14
Pump 14
Motor 14
Shaft seal 15
Sectional drawings 16
Material specification 18

7. Operating conditions 19
Ambient temperature 19
Storage and transport temperature 19
Installation altitude 19
Temperatures and pressures 20
Environmental rating 21
Outdoor installation 22
Operating range of the shaft seal 22
Viscosity 22
Installation of pump 22
Frequency of starts and stops 22

8. CME pumps 23
Communication with CME pumps 23
Speed control of CME pumps 24
CM connected to Grundfos CUE external variable frequency drive 25

9. Approvals and markings 27
Markings 27

10. Certificates 28

11. Selection and sizing 31
Selection of pumps 31
Selection of CME pumps 33

12. How to read the curve charts 34
Guidelines to performance curves 34

13. Performance curves 35
CM 1 35
CM 3 36
CM 5 37
CM 10 38
CM 15 39
CM 25 40
CME 1 41
CME 3 42
CME 5 43
CME 10 44
CME 15 45
CME 25 46

14. Technical data 47
CM 1-A 47
CM 1-I and CM 1-G 48
CM 3-A 49
CM 3-I and CM 3-G 50
CM 5-A 51
CM 5-I and CM 5-G 52
CM 10-A 53
CM 10-I and CM 10-G 54
CM 15-A 55
CM 15-I and CM 15-G 56
CM 25-A 57
CM 25-I and CM 25-G 58
CME 1-A 59
CME 1-I and CME 1-G 60
CME 3-A 61
CME 3-I and CME 3-G 62
CME 5-A 63
CME 5-I and CME 5-G 64
CME 10-A 65
CME 10-I and CME 10-G 66
CME 15-A 67
CME 15-I and CME 15-G 68
CME 25-A 69
CME 25-I and CME 25-G 70
CME Plus technical data 71

15. Weights and shipping volume 73
CME pumps 76

16. Motor data 78
Mains-operated motors, 60 Hz 78
Speed-controlled motors 79
Additional data for speed-controlled motors 79

17. Customization 83
Motors 83
Alternative connection positions 87
Surface treatments 87

18. Advanced use of CME pumps 88
Introduction 88
Standstill heating 88
Stop function 88
Signal relay 89

19. Accessories **90**
Pipe connections 90
Potentiometer for CME 93
Communication interface modules (CIM) 93
Grundfos GO 93
LiqTec 94
Grundfos pressure sensor 97
Pressure sensor 98
Grundfos differential-pressure sensor, DPI 99
Flow transmitters 101
Gauges 101
MP 204 motor protector 102
Angled cable gland 102

20. Submittal data **103**

21. Quotation text **104**

22. Grundfos Product Center **105**

1. Applications

The CM and CME pumps are designed to cover a wide variety of applications, ranging from small domestic installations to large industrial systems. The pumps are suitable for a wide variety of pumping systems where the performance and material of the pump must meet specific demands.

Some of the most typical applications are:

- washing and cleaning
- water treatment
- temperature control
- pressure boosting.

Washing and cleaning

TM05 4756 4508

Fig. 1 Washing and cleaning

CM and CME pumps can be used in washing and cleaning applications, which usually involve pumping of water containing soap or other cleaning agents.

Reference applications

Typical washing and cleaning applications:

- degreasing and washing of production equipment in industrial environments (such as the food and beverage industry)
- washing machines
- vehicle-washing tunnels
- mobile-washing units
- units for CIP (cleaning-in-place).

Water treatment

TM05 4757 4508

Fig. 2 Water treatment

In water treatment plants, the water undergoes a process which makes it more suited for its end use. In this process, the CM and CME pumps can be utilized either as feed pumps or as booster pumps.

Reference applications

Typical water treatment applications:

- nano-, micro- and ultra-filtration systems
- softening, ionizing, demineralizing systems
- desalination systems
- distillation systems
- separators
- swimming pools.

Temperature control

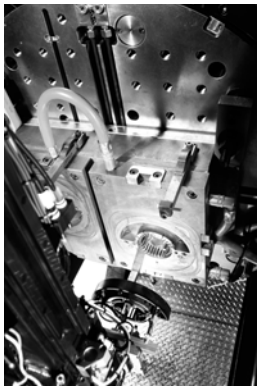

TM05 4758 1809

Fig. 3 Temperature control

Temperature control involves applications where the CM and CME pumps circulate a liquid in a closed loop consisting of a heating or cooling element for optimizing a process by means of temperature. Temperature control is also chilling of equipment or food and beverages in the food production industry.

Reference applications

The CM and CME pumps can be used for example in temperature control systems such as:

- electronic data processing
- laser equipment
- medical equipment
- industrial refrigeration
- heating and cooling in industrial processes
- moisturizing and humidifying.

To ensure safe and reliable operation in applications involving temperature control, we offer CM and CME pumps designed to meet your needs. We provide solutions for applications involving pumping of these liquids:

- liquids at temperatures down to -4 °F (-20 °C)
- high-temperature liquids
- high-viscous liquids, etc.

Pumping of liquids at temperatures down to -4 °F (-20 °C)*

All CM, CME-A, -I, -G pumps are capable of pumping liquids at temperatures down to -4 °F (-20 °C).

CM, CME-I, -G pumps capable of pumping liquids down to -22 °F (-30 °C) are available on request.

At such low temperatures, the selection of wrong materials and dimensions may cause deformation because of thermal expansion, and eventually stoppage of operation.

Pumping of high-temperature liquids

The pumping of hot liquids such as water-based liquids up to 248 °F (120 °C) demands much of the pump parts, such as shaft seals and rubber parts.

Pumping of highly viscous liquids

In applications where highly viscous liquids are pumped, the motor of the pump can be overloaded, and the pump performance will be reduced.

The viscosity of a pumped liquid depends strongly on the pumped liquid and its temperature.

To meet the above-mentioned requirements, we offer CM and CME pumps with oversize motors.

Pressure boosting

TM05 4759 4508

Fig. 4 Pressure boosting

In pressure-boosting applications, the pumped liquid must be delivered at a desired pressure on demand. The main priorities in pressure-boosting applications are to ensure maximum reliability and user comfort. The CM and CME pumps are ideal for such applications.

Reference applications

Typical pressure-boosting applications:

- pressure boosting and transfer of drinking water
- process-water systems.

Other applications

Besides the applications mentioned above, the CM and CME pumps can be used in many other applications.

Examples:

- distilling systems
- dosing / mixing
- evaporation
- OEM machinery
- chemical industry
- pharmaceutical industry.

2. Product introduction

Introduction

The Grundfos CM and CME pumps are non-self-priming, horizontal, multistage, end-suction centrifugal pumps. The pumps are of the close-coupled type. CM pumps are fitted with mains-operated motors whereas the motor for CME pumps has an integrated variable frequency drive. Both CM and CME pumps have mechanical shaft seals.

The CM and CME pumps are available in these three material versions:

- Cast iron (ASTM A48 CL30 / EN-GJL-200)*
- Stainless steel (AISI 304 / EN 1.4301)
- Stainless steel (AISI 316 / EN 1.4401).

* The impeller, chamber and filling plugs are made of stainless steel (AISI 304 / EN 1.4301).
The pump shaft is made of stainless steel (AISI 431 / EN 1.4057).

CM

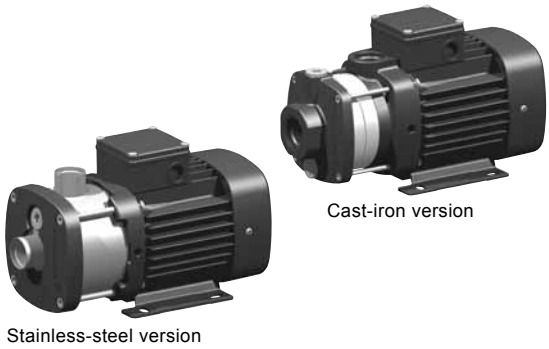

Fig. 5 Grundfos CM pumps

The CM pumps are unique products that have been developed in order to fulfill a wide variety of customer demands. The development of the pumps has resulted in no less than five patent applications.

The CM pumps are available in various sizes and numbers of stages to provide the flow rate and pressure required.

The CM pumps consist of two main components: the motor and the pump unit.

The motor is a Grundfos motor.

The pump unit incorporates optimized hydraulics and offers various types of connections.

The pumps offer many advantages; see also *Features and benefits* on page 9:

- compact design
- worldwide usage
- high reliability
- service-friendly
- wide performance range
- low noise
- customized solutions.

CME

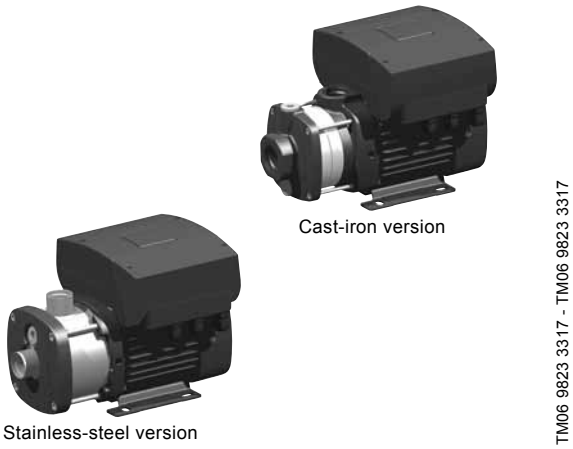

Fig. 6 Grundfos CME pumps

The CME pumps are built on the basis of CM pumps.

CME pumps belong to the so-called E-pump family.

The difference between the CM and the CME pump ranges is the motor.

The CME pump motor is a Grundfos MLE motor. The motor incorporates a variable frequency drive (VFD).

Frequency control enables continuously variable control of the motor speed, which makes it possible to set the pump to operation at any duty point. The aim of continuously variable control of the motor speed is to adjust the performance to a given requirement.

You can connect a pressure sensor to the built-in variable frequency drive on CME pumps. For further information about CME pumps, see *Communication with CME pumps* on page 23.

The pump materials are identical to those of the CM pump range.

Highest energy efficient rating worldwide

CME pumps are fitted with the new-generation MLE motors, which are permanent-magnet motors incorporating a high-efficiency variable frequency drive. This ensures an even higher pump efficiency.

CME pumps are used when uncontrolled operation (open loop) is required or when there is a wish to fit a sensor at a later stage in order to enable:

- Pressure control
- flow control
- level control of liquid in a tank
- temperature control
- differential pressure control
- differential temperature control.

E-pumps without sensor are also used when a remote analog signal is connected to the setpoint input terminal.

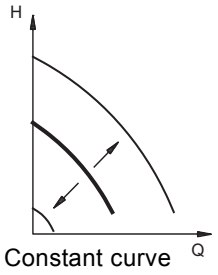

TM01 0684 0808

Fig. 7 E-pumps without sensor

An E-pump is not just a pump, but a system which is able to solve application problems or save energy in a variety of pump installations.

New generation CME 0.75 to 7.5 hp Permanent magnet motor (Supply voltages T, U, V)

The CME pumps in this range are fitted with the new-generation MLE motors which are permanent-magnet motors incorporating a high-efficiency variable frequency drive. This ensures an even higher efficiency of the pump.

The new motor including variable frequency drive has a total efficiency which exceeds the premium efficiency level defined for fixed-speed motors.

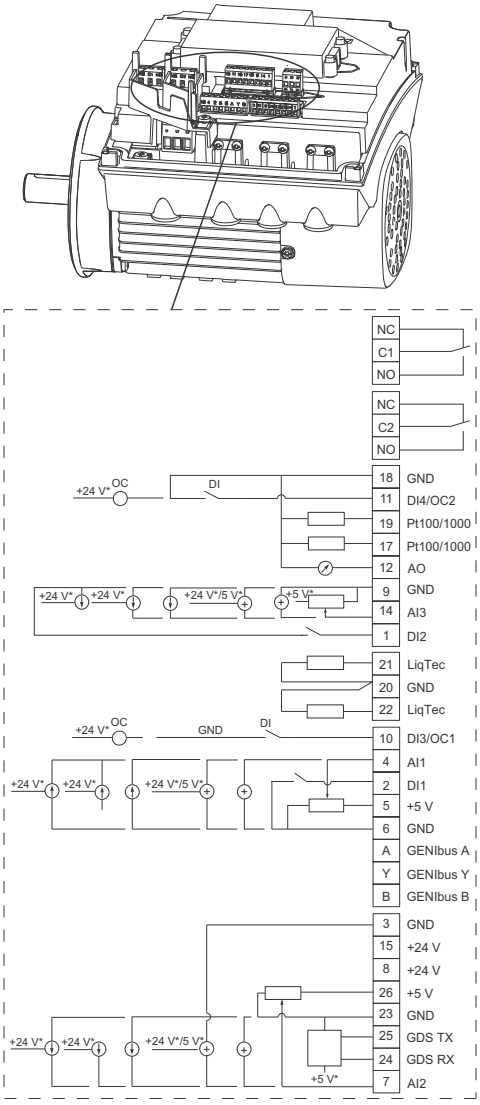

TM05 3509 3512

* If you use an external supply source there must be a connection to GND.

Fig. 8 Connection terminals, CME pump

Advanced functional module (FM 300)

The FM 300 is the standard functional module.

The module has a number of inputs and outputs enabling the motor to be used in advanced applications where many inputs and outputs are required.

The FM 300 has these connections:

- three analog inputs
- one analog output
- two dedicated digital inputs
- two configurable digital inputs or open-collector outputs
- Grundfos Digital Sensor input and output
- two Pt100/1000 inputs
- two LiqTec sensor inputs
- two signal relay outputs
- GENIbus connection.

Connection terminals

Functional module 300 has been selected as standard for CME pumps.

See fig. 4.

Terminal	Type	Function
NC	Normally closed contact	Signal relay 1 (LIVE or PELV)
C1	Common	
NO	Normally open contact	
NC	Normally closed contact	Signal relay 2 (PELV only)
C2	Common	
NO	Normally open contact	
18	GND	Ground
11	DI4/OC2	Digital input / output, configurable. Open collector: Max. 24 V resistive or inductive.
19	Pt100/1000 input 2	Pt100/1000 sensor input
17	Pt100/1000 input 1	Pt100/1000 sensor input
12	AO	Analog output: 0-20 mA / 4-20 mA 0-10 V
9	GND	Ground
14	AI13	Analog input: 0-20 mA / 4-20 mA 0-10 V
1	DI2	Digital input, configurable
21	LiqTec sensor input 1	LiqTec sensor input (white conductor)
20	GND	Ground (brown and black conductors)
22	LiqTec sensor input 2	LiqTec sensor input (blue conductor)
10	DI3/OC1	Digital input / output, configurable. Open collector: Max. 24 V resistive or inductive.
4	AI1	Analog output: 0-20 mA / 4-20 mA 0.5 - 3.5 V / 0-5 V / 0-10 V
2	DI1	Digital input, configurable
5	+5 V	Supply to potentiometer and sensor
6	GND	Ground
A	GENIbus, A	GENIbus, A (+)
Y	GENIbus, Y	GENIbus, GND
B	GENIbus, B	GENIbus, B (-)
3	GND	Ground
15	+24 V	Supply
8	+24 V	Supply
26	+5 V	Supply to potentiometer and sensor
23	GND	Ground
25	GDS TX	Grundfos Digital Sensor output
24	GDS RX	Grundfos Digital Sensor input
7	AI2	Analog input: 0-20 mA / 4-20 mA 0.5 - 3.5 V / 0-5 V / 0-10 V

Selecting a CME pump

Select a CME pump if the following features are required:

- Controlled operation, i.e. consumption fluctuates
- constant pressure, flow rate, or temperature
- communication with the pump.

Adaptation of performance through frequency-controlled speed offers obvious benefits such as:

- Energy savings
- increased comfort
- control and monitoring of the application and pump performance.

For further information about CME pumps, see *Communication with CME pumps* on page 23.

CME Plus

CME Plus pumps are built on the basis of CME pumps. In addition to the features of a standard CME, the CME Plus includes a pressure sensor, expansion tank, and outlet piping making it a complete package ready for constant pressure applications.

The CME Plus incorporates a stop function ensuring that the pump automatically stops if the water demand drops to a very low level or disappears altogether. The method gives good total operating economy irrespective of the water demand, and the pump is not subjected to overheating and the subsequent risk of damage to the shaft seal.

Features and benefits

TM04 3509 4508 - TM06 6197 0816

Fig. 9 CM and CME pumps

CM and CME pumps present the following features and benefits:

Compact design

Pump and motor are integrated in a compact and user-friendly design. The pump is fitted to a low-profile base plate, making it ideal for installation in systems where compactness is important.

Modular construction/customized solutions

The modular construction of the CM and CME pumps makes it easy to create many different variants based on standard factory parts. This means that it is possible to create pump variants that are customized for the application in question.

Worldwide usage

- With different voltage and frequency combinations, the CM and CME product ranges cover markets worldwide.
- Various certificates covering worldwide usage are available. Contact Grundfos for details.

High reliability

- New state-of-the-art shaft seal design and materials offering these benefits:
  - high wear resistance and long operating life
  - improved sticking and dry-running capabilities.
- The pumps are less sensitive to impurities in the pumped liquid than similar pumps of the canned-rotor type.

Easy installation and service friendly

- An installation indicator is fitted on three-phase pumps, which makes it easy to see if the electrical connection of the motor is correct. Based on the motor cooling air, it indicates the direction of rotation of the motor.
- No special service tools required.
- Kits in stock for quick delivery.
- All parts available as kits, single parts or in bulk.
- Service instructions and video make it simple to disassemble and assemble the pump.
- Service kit instructions available where deemed necessary.

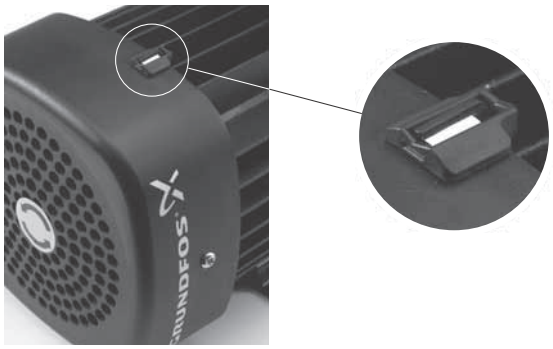

Fig. 10 Indicator for motor rotation shows black if rotation is correct; white if rotation is incorrect

Wide performance range

- Can be used in a wide range of applications:
  - washing and cleaning
  - water treatment
  - temperature control
  - pressure boosting
  - chemical industry
  - pharmaceutical industry
  - etc.
- For product range visit the Grundfos Product Center at: http://product-selection.grundfos.com (See page 105).

Low noise level

The CM and CME pumps offer very quiet operation.

High-performance hydraulics

Pump efficiency is maximized by the optimized hydraulics and carefully crafted production technology.

Electrocoated cast-iron parts

- Optimized corrosion resistance
- Better efficiency because of smooth surfaces.

Customized solutions

It is possible to create many different variants of the CM and CME pumps. For further information, see *17. Customization* on page 83.

- Motor adaptation
- Pump body modifications.

Motors

Grundfos motors are remarkably quiet and highly efficient.

Grundfos motors are available with integrated variable frequency drive designed for speed-controlled operation.

3. Performance range

CM, 3480 rpm

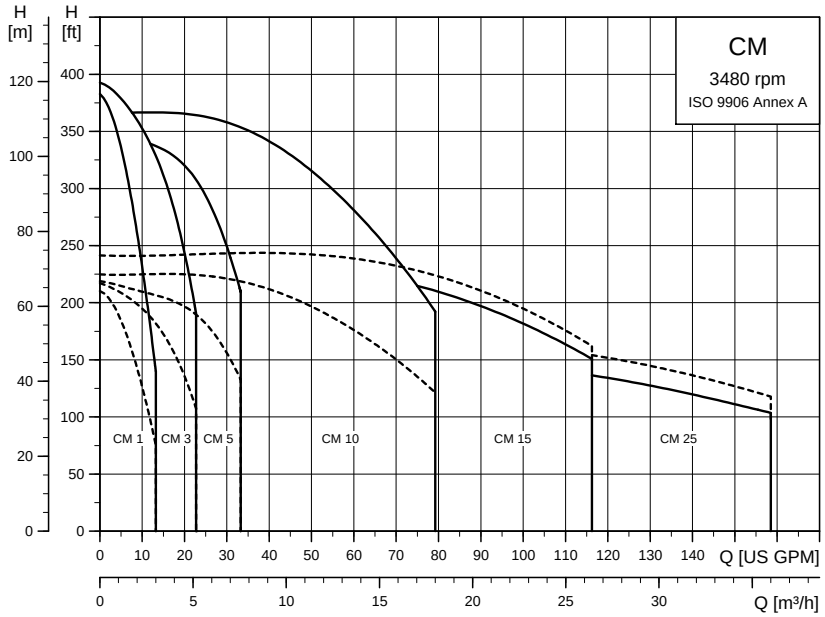

TM04 5876 3610

- - - - -CM-A
———CM-I/G

CME, 3480 rpm

(Supply voltages T, U, V)

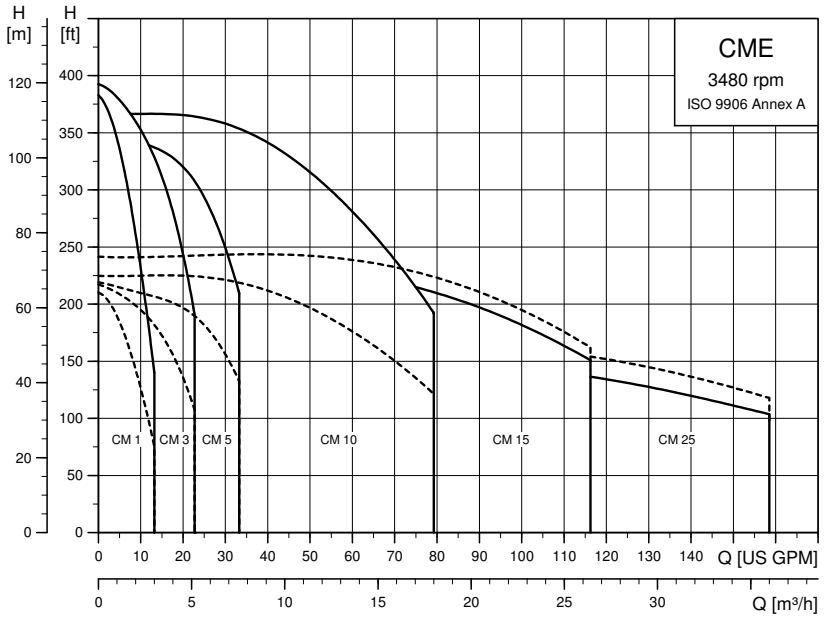

TM07 0598 0418

- - - - -CME-A
———CME-I/G

Note: Irrespective of the input frequency, the 100 % speed of CME pumps is approximately 3400 rpm.

4. Product range

Pump type	60 Hz			Shaft seal			Mains operated motor			Electronically speed controlled motor		
							60 Hz					
	Material						Voltage [V]			Voltage [V]		
	Cast iron EN-GJL-200 (CM-A)	Stainless steel AISI 304 / EN 1.4301 (CM-I)	Stainless steel AISI 316 / EN 1.4401 (CM-G)	AVBE[1], AVBV[1]	AQQE, AQQV, AQBE[1], AQBV[1], AQQK[1] AQQV, AQBV	RUUE[1], RUUV[1]	1 x 115/230 V (supply voltage B)[3]	3 x 208-230/440-480 V (supply voltage E)[3]	3 x 575 V (supply voltage H)[4]	3 x 200-240 V, (50/60 Hz) (supply voltage V)	3 x 440-480 V, (50/60 Hz) (supply voltage T)	1 x 200-240 V, (50/60 Hz) (supply voltage U)
CM 1-2	●	●	●	●	●	●	●	●	●			●
CM 1-3	●	●	●	●	●	●	●	●	●			●
CM 1-4	●	●	●	●	●	●	●	●	●			●
CM 1-5	●	●	●	●	●	●[2]	●	●	●			●
CM 1-6		●	●	●	●	●[2]	●	●	●			●
CM 1-7		●	●	●	●		●	●	●			●
CM 1-8		●	●	●[2]	●		●	●	●			●
CM 1-9		●	●	●[2]	●		●	●	●	●	●	●
CM 3-2	●	●	●	●	●	●	●	●	●			●
CM 3-3	●	●	●	●	●	●	●	●	●			●
CM 3-4	●	●	●	●	●	●	●	●	●			●
CM 3-5	●	●	●	●	●	●[2]	●	●	●			●
CM 3-6		●	●	●	●	●[2]	●	●	●	●	●	●
CM 3-7		●	●	●	●		●	●	●	●	●	●
CM 3-8		●	●	●[2]	●		●	●	●	●	●	
CM 3-9		●	●	●[2]	●			●	●	●	●	

Pump type	60 Hz			Shaft seal			Mains operated motor			Electronically speed controlled motor		
							60 Hz					
	Material						Voltage [V]			Voltage [V]		
	Cast iron EN-GJL-200 (CM-A)	Stainless steel AISI 304 / EN 1.4301 (CM-I)	Stainless steel AISI 316 / EN 1.4401 (CM-G)	AVBE[1], AVBV[1]	AQQE, AQQV, AQBE[1], AQBV[1], AQQK[1]	RUUE[1], RUUV[1]	1 x 115/230 V (supply voltage B)[3]	3 x 208-230/440-480 V (supply voltage E)[3]	3 x 575 V (supply voltage H)[4]	3 x 200-240 V, (50/60 Hz) (supply voltage V)	3 x 440-480 V, (50/60 Hz) (supply voltage T)	1 x 200-240 V, (50/60 Hz) (supply voltage U)
CM 5-2	●	●	●	●	●	●	●	●	●			●
CM 5-3	●	●	●	●	●	●	●	●	●			●
CM 5-4	●	●	●	●	●	●	●	●	●	●	●	●
CM 5-5	●	●	●	●	●	●[2]	●	●	●	●	●	
CM 5-6		●	●	●	●	●[2]		●	●	●	●	
CM 5-7		●	●	●	●			●	●	●	●	
CM 5-8		●	●	●[2]	●			●	●	●	●	
CM 10-1	●	●	●	●	●	●	●	●	●			●
CM 10-2	●	●	●	●	●	●		●	●	●	●	
CM 10-3	●	●	●	●	●	●[2]		●	●	●	●	
CM 10-4		●	●	●	●			●	●	●	●	
CM 10-5		●	●	●[2]	●			●	●	●	●	
CM 15-1	●	●	●	●	●	●		●	●	●	●	
CM 15-2	●	●	●	●	●	●		●	●	●	●	
CM 15-3	●	●	●	●	●	●[2]		●	●	●	●	
CM 25-1	●	●	●	●	●	●		●	●	●	●	
CM 25-2	●	●	●	●	●	●		●	●	●	●	

1) On request.
2) Neither suitable for 60 Hz mains-operated pumps, nor for CME pumps running at 100 % speed.
3) Pumps with supply voltages B and E are supplied for wire connection without a terminal board inside the terminal box (flying wires).
4) Only available with IE2-compliant motors and cannot be exported to the USA.

5. Identification

Type key CM, CME

Example CM 10 - 3 A - R - I - E - A V B E F - A - A - N

Type range

CM: Centrifugal Modular

CME: Centrifugal Modular with integrated variable frequency drive

Rated flow rate

Rated flow rate at 50 Hz [m^3/h]

Number of impellers

Pump version

A: Basic version

B: Oversize motor (one kW size larger)

D: Special nameplate

E: Pumps with certificates/approvals

N: CME pump with pressure sensor

P: Undersize motor (one kW size smaller)

T: Oversize motor (two kW sizes larger)

O: Self-priming version (maximum suction lift 8 meters)

S: Self-priming version (maximum suction lift 4 meters)

X: Special pump

Note: Two letters symbolize that two parameters have been combined.

Pipe connection

C: Tri-Clamp®

F: DIN/ANSI/JIS flange

P: Victaulic® coupling

R: Whitworth thread Rp (ISO 7/1)

S: Internal NPT thread

Materials in contact with pump media

A:	Inlet and outlet parts	EN-GJL-200
	Pump shaft	AISI 304 / EN 1.4301
	Impellers/chambers	AISI 304 / EN 1.4301
G:	Sleeve	AISI 316 / EN 1.4401
	Pump shaft	AISI 316 / EN 1.4401
	Impellers/chambers	AISI 316 / EN 1.4401
I:	Sleeve	AISI 304 / EN 1.4301
	Pump shaft	AISI 304 / EN 1.4301
	Impellers/chambers	AISI 304 / EN 1.4301
X:	Special version	

Rubber parts in pump (excluding neck ring and shaft seal)

E: EPDM (ethylene propylene)

K: FFKM (perfluoroelastomer)

V: FKM (fluoroelastomer)

Note: Gaskets between chambers of cast-iron versions are always made of Tesnit® BA-U

Shaft seal

A: O-ring seal with fixed driver

R: O-ring seal with fixed driver and reduced seal face

Material of rotating seal face

Q: Silicon carbide (SIC)

V: Aluminium oxide (Al203)

U: Tungsten carbide

Stationary seal face material

B: Carbon, resin-impregnated

Q: Silicon carbide (SIC)

U: Tungsten carbide

Secondary seal material

E: EPDM (ethylene propylene)

K: FFKM (perfluoroelastomer)

V: FKM (fluoroelastomer)

Supply voltage

A: 1 x 220 V, 60 Hz

B: 1 x 115/230 V, 60 Hz

C: 1 x 220-240 V, 50 Hz

D: 1 x 127 V, 60 Hz

E: 3 x 208-230/440-480 V, 60 Hz

F: 3 x 220-240/380-415 V, 50 Hz

G: 3 x 200/346 V, 50 Hz; 200-220/346-380 V, 60 Hz

H: 3 x 575 V, 60 Hz[1)]

I: 3 x 400 V, 50/60 Hz[1)]

J: 3 x 380-415 V, 50 Hz; 440-480 V, 60 Hz

O: 3 x 220-240/380-415 V, 50 Hz;
3 x 220-255/380-440 V, 60 Hz

R: 3 x 200-230 V, 50/60 Hz (E-motor)

S: 3 x 380-500 V, 50/60 Hz (E-motor)

T: 3 x 440-480 V, 50/60 Hz (E-motor)

U: 1 x 200-240 V, 50/60 Hz (E-motor)

V: 3 x 200-240 V, 50/60 Hz

X: Special voltage

Motor information

A: Standard motor (IP55)

B: Phase-insulated motor for use with variable frequency drive

C: Condensing environments

D: Pt100 in stator

E: Angular contact bearing

F: Motor heater

G: Three-phase motor with overload protection

H: Single-phase motor with no protection

I: Radio communication not available

J: IPX5

Mains plug

A: Prepared for cable glands

B: Harting plug

C: With cable

D: Cable gland included

Sensor

N: No sensor

Approvals

CM

CME

6. Construction

Pump

The CM and CME pumps are non-self-priming, horizontal, multistage centrifugal pumps. The pumps have an axial inlet port and a radial outlet port and are mounted on a base plate.

All movable parts are made of stainless steel.

The pumps are available with mains-operated motors (CM pumps) and with variable frequency drive motors (CME pumps).

All pumps incorporate a maintenance-free mechanical O-ring shaft seal with fixed driver.

TM04 3509 4508 - TM06 9824 3317- TM04 3508 4508 - TM06 9823 3317

Fig. 11 CM and CME pumps

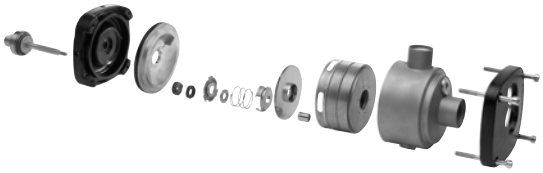

TM05 1130 2211

Fig. 12 CM and CME pump hydraulics

Motor

CM and CME pumps are fitted with totally enclosed, fan-cooled, 2-pole motors. Single-phase CM and CME pumps are available from 0.75 Hp to 2 Hp.
Three-phase CM pumps are available from 0.5 Hp to 8.5 Hp. Three-phase CME pumps are available from 2 Hp to 10 Hp.

Efficiency

All three-phase motors 1 Hp and above meet the requirements of the Energy Independence and Security Act (EISA).

The new-generation MLE motors have a total efficiency which exceeds the premium efficient level defined for fixed-speed motors including the variable frequency drive.

Approvals

CM CME

Electrical data

Insulation class	F
Enclosure class	TEFC (IP55)*
Efficiency	Premium efficient as needed
Supply voltages (tolerance ± 10 %)	CM 1 x 115/230 V, 60 Hz (B) 3 x 208-230/440-480 V, 60 Hz (E) 3 x 575 V, 60 Hz (H) CME 1 x 200-240 V, 60 Hz (U) 3 x 200-240 V, 60 Hz (V) 3 x 440-480 V, 60 Hz (T)

* IP55 is not recommended for operation in condensing environments.
For operation in such environments, see *Operation in condensing environments* on page 21.

Motor protection

CM

Single-phase motors, 1 x 115/230 V, 60 Hz, do not incorporate motor protection and must be connected to a motor-protective circuit breaker which can be manually reset. Set the motor-protective circuit breaker according to the rated current of the motor ($I_{1/1}$). See nameplate.

Other single-phase motors have built-in current- and temperature-dependent motor protection in accordance with IEC 60034-11 and require no further motor protection. The motor protection is of the TP 211 type, which reacts to both slow- and quick-rising temperatures. The motor protection is automatically reset.

Three-phase motors up to 5 Hp must be connected to a motor-protective circuit breaker which can be manually reset. Set the motor-protective circuit breaker according to the rated current of the motor ($I_{1/1}$). See nameplate.

Electronically speed-controlled motors (CME)

CME pumps require no external motor protection. The MLE motor incorporates thermal protection against slow overloading and stalled condition (IEC 34-11).

Variable frequency drive (VFD) operation

All three-phase motors can be connected to a variable frequency drive. Depending on the type of variable frequency drive, this may cause increased acoustic noise from the motor. Furthermore, it may cause the motor to be exposed to detrimental voltage peaks.

As standard ML 90 motors and above include phase insulation.

As standard ML 71- and ML 80-based motors have no phase insulation and must therefore be protected against voltage peaks higher than 650 V (peak value) between the supply terminals.

Note: ML 71- and ML 80-based motors with phase insulation are available on request.

Both increased acoustic noise and detrimental voltage peaks can be eliminated by fitting an LC filter between the variable frequency drive and the motor.

For further information, please contact the variable frequency drive supplier or Grundfos.

Shaft seal

The shaft seal for the CM and CME pumps is of the O-ring type, which makes it very flexible when different types of O-rings and seal-face materials are needed. The shaft seal has a fixed seal driver which ensures a reliable rotation of all parts - even under the most extreme operating conditions.

Due to the special design of the shaft seal and the interfaces to the rest of the pump construction, the dry-running capabilities are improved significantly compared to most other similar shaft seals and pump types. Furthermore, improvements have been made to reduce the risk and effect of sticking. The shaft seal types available can be found in *Selection of shaft seal* on page 33 where the key parameters of selecting a shaft seal are also described.

TM05 1131 2211

Fig. 13 Exploded view of shaft seal

Note: The available shaft seals for CM and CME pumps are very robust and durable, but dry running must always be avoided.

Details regarding operating conditions for the shaft seal can be found in *Operating range of the shaft seal* on page 22.

Further information about the shaft seal can be found in the separate booklet covering shaft seals which can be ordered from Grundfos. See *22. Grundfos Product Center* on page 105.

Title	Publication number
Mechanical shaft seals for pumps	97506935

Sectional drawings

CM, CME A

(A = cast iron, A48 CL30 / EN-GJL-200)

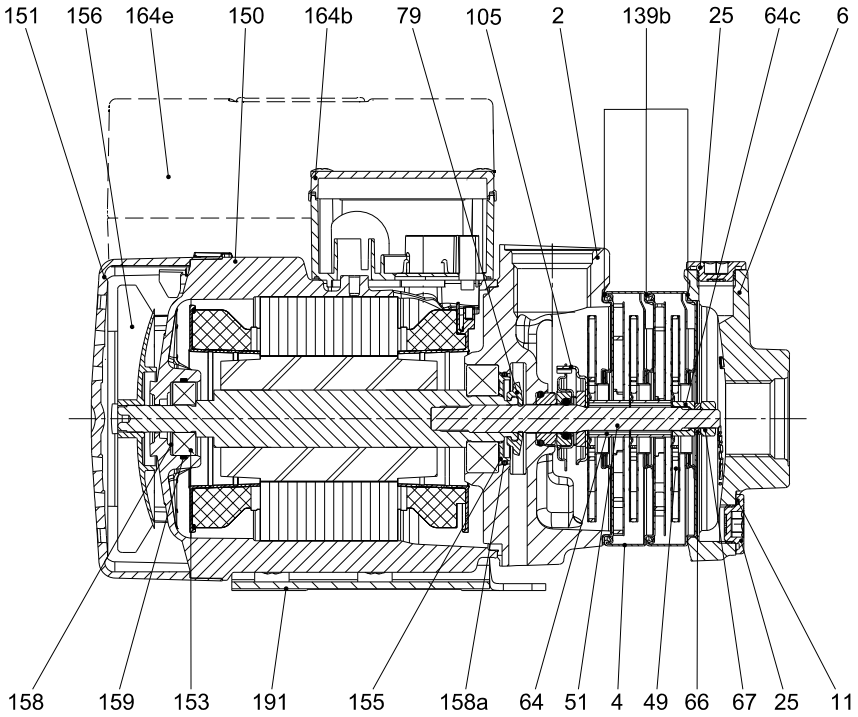

Fig. 14 CM, CME 1-3 with ML, MLE 71 motor

Components

Pos.	Component	Pos.	Component	Pos.	Component
2	Outlet part	64c	Clamp	153	Ball bearing
4	Chamber	66	Washer (NORD-LOCK®)	155	Bearing cover plate
6	Inlet part	67	Nut	156	Fan
11	O-ring	79	Diverting disc	158	Corrugated spring
25	Plug	105	Shaft seal	158a	O-ring
49	Impeller	139b	Gasket	159	O-ring
51	Pump shaft	150	Stator housing	164b, 164e	Terminal box
64	Spacing pipe	151	Fan cover	191	Base plate

CM, CME I and CM, CME G

(I = AISI 304 / EN 1.4301 and G = AISI 316 / EN 1.4401)

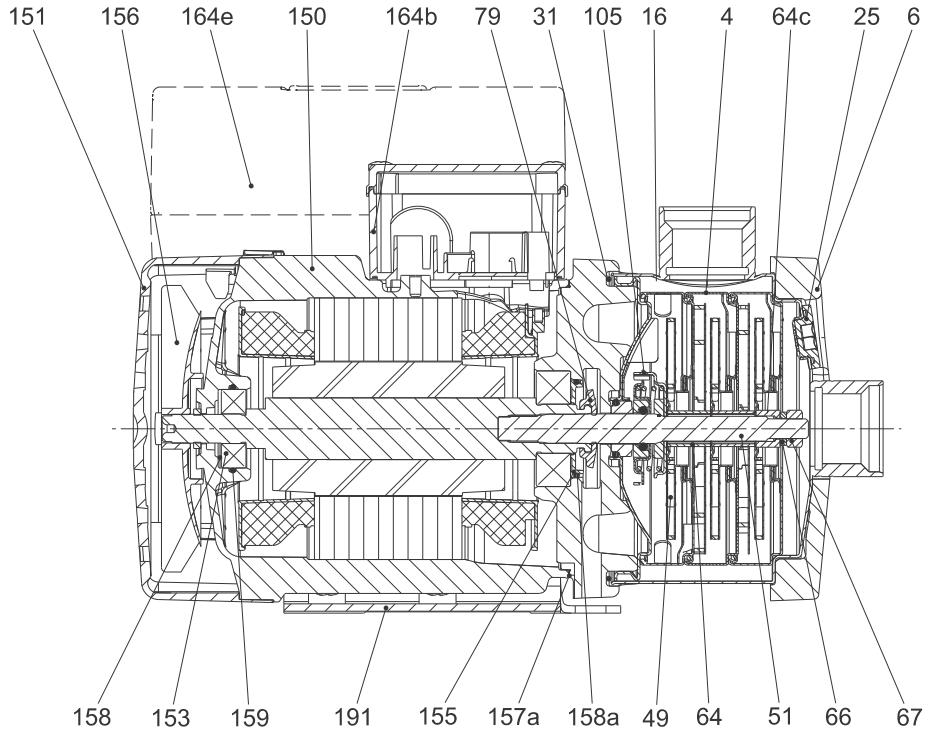

Fig. 15 CM, CME 1-3 with ML, MLE 71 motor

Components

Pos.	Component	Pos.	Component	Pos.	Component
4	Chamber	64c	Clamp	155	Bearing cover plate
6	Flange	66	Washer (NORD-LOCK®)	156	Fan
16	Sleeve	67	Nut	157a	Gasket
25	Plug	79	Diverting disc	158	Corrugated spring
31	O-ring	105	Shaft seal	158a	O-ring
49	Impeller	150	Stator housing	159	O-ring
51	Pump shaft	151	Fan cover	164b, 164e	Terminal box
64	Spacing pipe	153	Ball bearing	191	Base plate

Material specification

Pos.	Description	Material	Pump material version					
			Cast iron (EN-GJL-200)		Stainless steel (AISI 304 / EN 1.4301)		Stainless steel (AISI 316 /EN 1.4401)	
			ISO/AISI/ASTM	EN	ISO/AISI/ASTM	EN	ISO/AISI/ASTM	EN
Motor parts								
156b	Motor flange	Cast iron						
150	Stator housing	Silumin (Alu)						
151	Fan cover	Composite PBT/PC						
153	Ball bearing							
156	Fan	Composite PA 66 30 % GF						
158	Corrugated spring	Steel						
164b	Terminal box, MG	Composite PC/ASA or silumin (Alu)						
164e	Terminal box, MLE							
191	Base plate	Steel, electrocoated		1.0330.3		1.0330.3		
		Steel, powder-coated, 60 to 120 µ, NCS 7005						1.0330.3
79	Diverting disc	Silicone fluid (LSR)						
155	Bearing cover plate	PPS						
Pump parts								
105	Shaft seal, steel parts	Stainless steel	AISI 304/ AISI 316[1)]	1.4301/ 1.4401[1)]	AISI 304/ AISI 316[1)]	1.4301/ 1.4401[1)]	AISI 316	1.4401
	Shaft seal, seal faces	Al_2O_3/carbon or SiC						
51	Pump shaft	Stainless steel	AISI 304	1.4301	AISI 304/ AISI 316[1)]	1.4301/ 1.4401[1)]	AISI 316	1.4401
11 31[3)] 158a 159	O-rings	EPDM, FKM or FFKM						
157a[3)]	Gasket	Paper						
139b[4)]	Gasket	Aramide fibers (nbr)						
2[4)]	Outlet part	Cast iron						
6[4)]	Inlet part	Cast iron						
4	Chamber	Stainless steel	AISI 304/ AISI 316[1)]	1.4301/ 1.4401[1)]	AISI 304/ AISI 316[1)]	1.4301/ 1.4401[1)]	AISI 316	1.4401
25	Plug	Stainless steel	AISI 316L	1.4404	AISI 316L	1.4404	AISI 316L	1.4404
49	Impeller	Stainless steel	AISI 304/ AISI 316[1)]	1.4301/ 1.4401[1)]	AISI 304/ AISI 316[1)]	1.4301/ 1.4401[1)]	AISI 316	1.4401
64	Spacing pipe	Stainless steel	AISI 316	1.4401	AISI 316	1.4401	AISI 316	1.4401
64c	Clamp	Stainless steel		STX2000[5)]		STX2000[5)]		STX2000[3)]
6[3)]	Flange	Cast iron						
16	Sleeve	Stainless steel			AISI 304/ AISI 316[1)]	1.4301/ 1.4401[1), 2)]	AISI 316	1.4401
67	Nut	Stainless steel A4						
66	Washer (NORD-LOCK)	Steel		1.4547		1.4547		1.4547

1) On request.

2) As standard, the pumps listed below are fitted with sleeves made of stainless steel 1.4401:
CM, CME 1-9 up to and including CM, CME 1-14
CM, CME 3-9 up to and including CM, CME 3-14
CM, CME 5-9 up to and including CM, CME 5-13
CM, CME 10-6 up to and including CM, CME 10-8.

3) Only in CM, CME-I/G pumps.

4) Only in CM, CME-A pumps.

5) STX2000 ~ CrNiMO 22 19 4.

7. Operating conditions

Ambient temperature

The maximum ambient temperature depends on the liquid temperature. The table below shows within which temperature ranges the CM and CME pumps must be used.

Note: The maximum permissible liquid temperature for CM-A and CME-A is 194 °F (90 °C).

Maximum ambient temperature [°F (°C)]	Minimum ambient temperature [°F (°C)]	Liquid temperature [°F (°C)]	Pump type	
			CM	CME[1)]
131 (55)	-4 (-20)	140 (60)	•	-
131 (55)		194 (90)	•	-
122 (50)		212 (100)[1)]	•	•
113 (45)		230 (110)[1)]	•	•
104 (40)		248 (120)[1)]	•	•

[1)] CME (supply voltages T, U)

CM

If the ambient temperature for CM pumps exceeds 131 °F (55 °C) the motor must not be fully loaded due to the risk of overheating.

In such cases, it may be necessary to derate the motor output or use an oversize motor with higher rated output. The CM pumps can be derated in relation to ambient temperature without consequence. Contact Grundfos for further information.

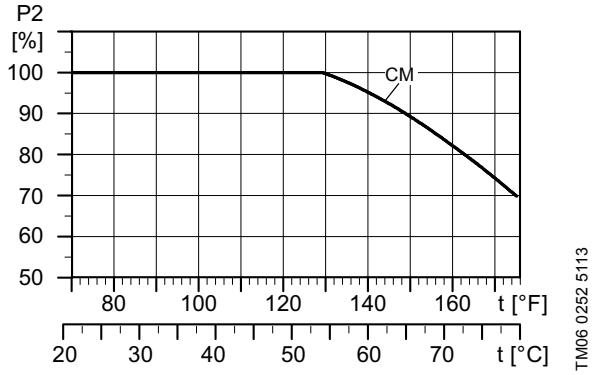

Fig. 16 Derating of CM pump, in relation to ambient temperature

CME (variable frequency drive motors)

The electronics incorporated in the CME pumps is limiting the maximum ambient temperature. This means that the maximum ambient temperature must not be exceeded. If the pump is operated at temperatures exceeding the maximum ambient temperature, the motor life will be reduced.

Maximum ambient temperature

CME 0.75 to 10 Hp (supply voltages T, U):

122 °F (50 °C).

CME 2 to 10 Hp (supply voltage V):

104 °F (40 °C).

Storage and transport temperature

-22 to +140 °F (-30 to +60 °C).

Installation altitude

Installation altitude is the height above sea level of the installation site. Motors installed at maximum altitude can be loaded 100 %. Motors installed above maximum altitude must not be fully loaded due to the low density and consequently low cooling effect of the air.

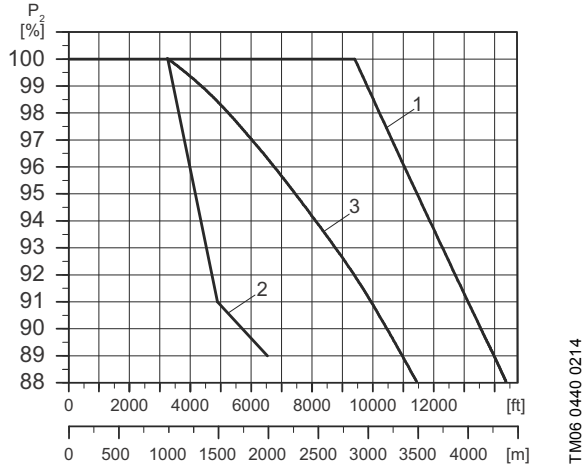

Fig. 17 Relationship between motor output (P_2) and altitude

Pos.	Pump type	Voltage type
1	CM	All
2	CME	T, U, V

Temperatures and pressures

Maximum operating pressure and permissible liquid temperature

The maximum operating pressure and the permissible liquid temperature depend on the pump material, the type of shaft seal and the pumped liquid.

Material variant	Shaft seal	Permissible liquid temperature[1] [°F (°C)]	Maximum operating pressure [psi (bar)]
Cast iron (A48 CL30 / EN-GJL-200)	AVBx	-4 to +104 (-20 to +40)	145 (10)
		+105 to +194 (+41 to +90)	87 (6)
	AQQx	-4 to +194 (-20 to +90)	145 (10)
	RUUx	-4 to +140 (-20 to +60)	87 (6)
Stainless steel (AISI 304 / EN 1.4301)	AVBx	+4 to +104 (-20 to +40)	145 (10)
		+105 to +194 (+41 to +90)	87 (6)
	AQQx	-4 to +194 (-20 to +90)[3]	232 (16)
		+195 to +248 (+91 to +120)[2]	145 (10)
	RUUx	-4 to +140 (-20 to +60)	87 (6)
Stainless steel (AISI 316 / EN 1.4401)	AVBx	-4 to +104 (-20 to +40)	145 (10)
		+105 to +194 (+41 to +90)	87 (6)
	AQQx	-4 to +194 (-20 to +90)[3]	232 (16)
		+195 to +248 (+91 to +120)[2]	145 (10)
	RUUx	-4 to +140 (-20 to +60)	87 (6)

1) At liquid temperatures below +32 °F (0 °C), higher motor outputs may be needed due to increased viscosity, for instance if glycol has been added to the water.

2) +248 °F (+120 °C) applies only if the pump has an AQQE shaft seal.

3) CM-I, -G and CME-I, -G pumps for liquid temperatures below -4 °F (-20 °C) are available on request. Please contact Grundfos.

Maximum liquid temperature change gradient

Cast-iron pumps (CM-A, CME-A) may not be used in applications where rapid temperature changes of more than 81 °F (45 °C) may occur. If exposed to such rapid temperature changes, a cast-iron pump may leak.

Under such operating conditions, we recommend to use stainless-steel pumps (CM-I, -G and CME-I, -G).

Liquid temperature range

O-ring material / liquid	Permissible liquid temperature [°F (°C)]
EPDM	-4 to +248 (-20 to +120)
FFKM	+32 to +248 (0 to +120)
FKM / liquids containing water	-4 to +194 (-20 to +90)
FKM / oil without water	-4 to +248 (-20 to +120)

Maximum inlet pressure

The maximum inlet pressure of the CM pumps is equal to the maximum operating pressure of the pump minus the pumps outlet pressure against a closed valve.

For example:

CM5-3 A-S-A-E-AQQE

Maximum operating pressure: 145 psi (10 bar)

Outlet pressure against closed valve: 57 psi (3.93 bar)

Maximum inlet pressure: 145 psi minus 57 psi = 88 psi (6.06 bar).

Minimum inlet pressure

NPSH

We recommend that you calculate the inlet pressure "H" in these situations:

- The liquid temperature is high.
- The flow rate is significantly higher than the rated flow.
- Water is drawn from depths.
- Water is drawn through long pipes.
- Inlet conditions are poor.

To avoid cavitation, make sure that there is a minimum pressure on the inlet side of the pump. The maximum suction lift "H" in feet of head can be calculated as follows:

$H = p_b – NPSH – H_f – H_v – H_s$

p_b	=	Barometric pressure in feet absolute. (Barometric pressure can be set to 33.9). In closed systems, p_b indicates the system pressure in feet.
NPSH	=	Net Positive Suction Head in feet of head. (To be read from the NPSH curve at the highest flow rate the pump will be delivering).
H_f	=	Friction loss in inlet pipe in feet of head. (At the highest flow rate the pump will be delivering).
H_v	=	Vapor pressure in feet of head. (To be read from the vapor pressure scale. "H_v" depends on the liquid temperature "T_m").
H_s	=	Safety margin = minimum 2 ft of head.

If the "H" calculated is positive, the pump can operate at a suction lift of maximum "H" feet of head.

If the "H" calculated is negative, an inlet pressure of minimum "H" feet of head is required.

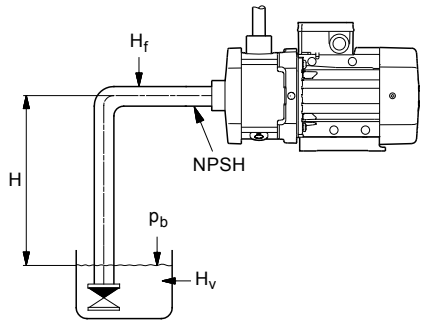

TM04 3487 4508

Fig. 18 Minimum inlet pressure (NPSH)

Note: To avoid cavitation, **never** select a pump with a duty point too far to the right on the NPSH curve.

Always check the NPSH value of the pump at the highest possible flow rate.

Sound pressure

The sound pressure values in the table below apply for CM pumps. If the motor output (P_2) for a given CM pump is not found in the table, use the nearest rounded-up value. The values for sound pressure include a tolerance of 3 dB[A] according to EN ISO 4871.

P_2 [Hp (kW)]	60 Hz
	$\bar{L}_{pA}$ [dB(A)]
0.5 (0.37)	54
0.75 (0.55)	53
1.0 (0.75)	54
1.5 (1.1)	49
2.0 (1.5)	59
3.0 (2.2)	60
4.0 (3.0)	60
5.3 (4.0)	64
7.4 (5.5)	64
10.0 (7.5)	65

The audible noise from CM pumps is primarily noise from the motor fan. The selection of CME pumps will reduce the noise at partial load, as the motor, and consequently, the motor fan runs at a lower speed. Possible flow noise from control valves is also reduced at partial load in the case of the CME pump. Sound pressure values are measured at a distance of 3 ft.

Operation in condensing environments

If the liquid temperature becomes lower than the ambient temperature, condensation may form in the motor during inactivity. In such cases, a motor suited for condensing environments must be used.

Alternatively, you can open the bottom drain hole in the motor flange by removing the plug. The enclosure class of the motor is then reduced to IPX5. Removing the plug helps prevent condensation in the motor as it will make the motor self-venting and allow water and humid air to escape.

When installing CM and CME pumps outdoors, provide them with a suitable cover to protect them from buildup of water condensation. See fig. 19.

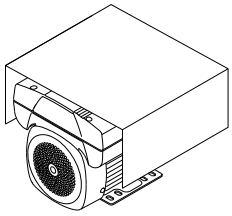

TM04 5799 4009

Fig. 19 CME pump with protective cover

Motors in outdoor installations radiate heat to and absorb heat from their surroundings. By day, a stopped motor will absorb more heat than it radiates; by night, especially clear nights, radiation from a stopped motor may be so high that the surface temperature falls a few degrees below the air temperature. This may cause the formation of condensation. Condensation on the inner surfaces may result in moisture on the electronic components, including the printed-circuit boards, which means a risk of failure or even destruction of the motor and electronics.

Furthermore, the cover protects the motor against direct sunlight.

Environmental rating

Three-phase CME motors hold a UL NEMA 3R environmental rating.

Single-phase CME motors have not been tested against the UL NEMA environmental rating.

All motors are IP55.

When the rubber plug is removed the rating becomes IP34. This applies to both CM and CME pumps. The use of a cover does not affect the IP rating.

Outdoor installation

According to UL 778/C22.2 No 108-14 pumps that are intended for outdoor use shall be marked enclosure type 3 and the product shall be tested with rated surface temperature down to -31 °F (-35 °C). The MLE enclosure is approved for type 3 or 4 and rated surface temperature down to 32 °F (0 °C), thus only for indoor use in UL 778/C22.2 No 108-14 pump applications. See the installation and operating instructions for additional details.

Operating range of the shaft seal

The operating range of the shaft seal depends on operating pressure, type of shaft seal and liquid temperature.

The curve in fig. 20 shows which shaft seals are suitable at a given temperature and a given pressure.

The curve applies to clean water.

For other pumped liquids, concentrations and temperatures, please visit the Grundfos Product Center liquids section at:
http://product-selection.grundfos.com/liquids.html

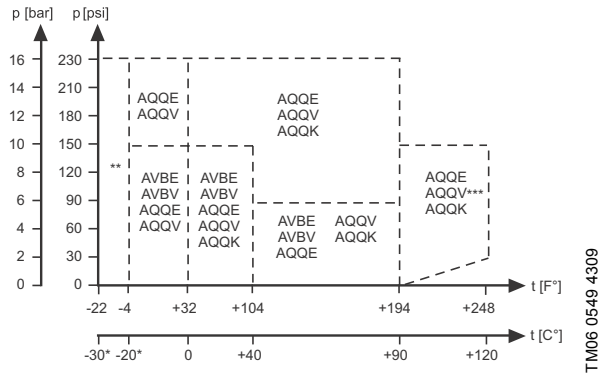

Fig. 20 Curve for the selection of shaft seals

* Antifreeze must be added at liquid temperatures below 32 °F (0 °C).
** CM and CME pumps for liquid temperatures below -4 °F (-20 °C) are available on request. Please contact Grundfos.
*** AQQV above 194 °F (90 °C) only in media not containing water.

Shaft seal run-in

The seal faces are lubricated by the pumped liquid, meaning that there may be a certain amount of leakage from the shaft seal.

When the pump is started up for the first time, or when a new shaft seal is installed, a certain run-in period is required before the leakage is reduced to an acceptable level. The time required for this depends on the operating conditions. For example, every time the operating conditions change, a new run-in period will be started.

Under normal conditions, the leaking liquid will evaporate. As a result, no leakage will be detected.

However, liquids such as kerosene will not evaporate. The leakage may therefore be seen as a shaft seal failure.

Viscosity

The pumping of liquids with densities or kinematic viscosities higher than those of water will cause a considerable pressure drop, a drop in the hydraulic performance and a rise in the power consumption.

For instance at liquid temperatures below 32 °F (0 °C), higher motor outputs may be needed due to increased viscosity if glycol has been added to the water.

In such situations, the pump must be fitted with a larger motor. If in doubt, contact Grundfos or visit the Grundfos Product Center at:
http://product-selection.grundfos.com. See page 105.

Installation of pump

The pump must be installed on a plane surface and fixed so that it cannot be displaced during startup and operation.

The pump must be installed so that air pockets are avoided in the pump housing and pipes; fig. 21 shows the permissible pump positions.

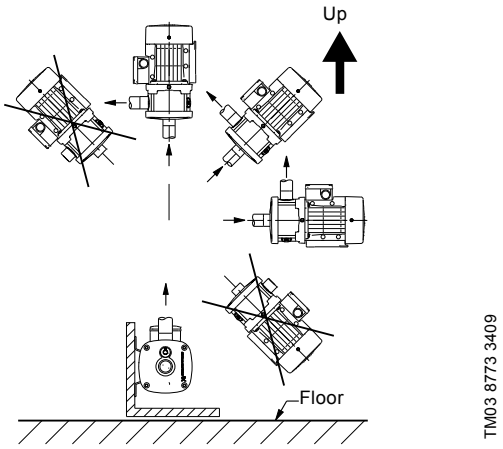

Fig. 21 Permissible pump positions

The pump must be installed with easy access for inspection, maintenance and service.

The pump must be installed in a well-ventilated location.

Frequency of starts and stops

Maximum of 100 per hour.

8. CME pumps

Communication with CME pumps

Communication with CME pumps is possible by means of:

- operating panel on the pump
- Grundfos GO remote
- a central building management system.

Operating panel

The operator can change the setpoint settings manually on the operating panel of the CME pump terminal box.

The design and functionality of the operating panels vary, depending on the MLE motor fitted to the CME pump.

The operating panel of the new-generation CME pumps enables radio communication. The Grundfos Eye at the top of the operating panel is a pump status indicator light providing information about the pump operating status. Less or more advanced operating panels are available on request.

New-generation CME with supply voltages T, U, V

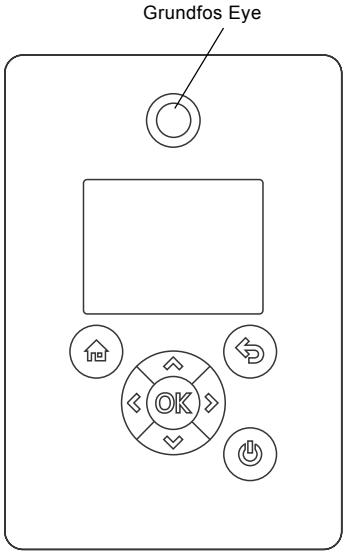

TM06 9616 2517

Fig. 22 Graphical operating panel of CME pumps

Grundfos GO

The pump is designed for wireless radio or infrared communication with Grundfos GO.

Grundfos GO enables setting of functions and gives access to status overviews, technical product information and actual operating parameters.

Grundfos GO offers the following mobile interfaces (MI).

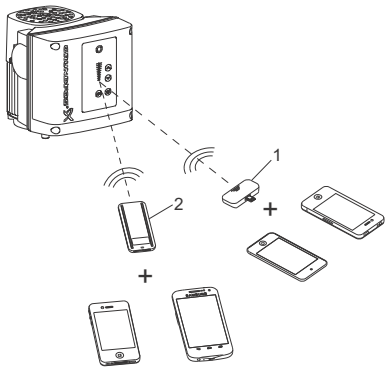

TM06 6256 0916

Fig. 23 Grundfos GO communicating with the pump via radio or infrared connection (IR)

Pos.	Description
1	Grundfos MI 204: Add-on module enabling radio or infrared communication. You can use MI 204 in conjunction with an iPhone or iPod with lightning connector, e.g. fifth generation or later iPhone or iPod. MI 204 is also available together with an iPod touch and a cover.
2	Grundfos MI 301: Separate module enabling radio or infrared communication. You can use the module in conjunction with an Android or iOS-based smart device with Bluetooth connection.

Grundfos GO is available as an accessory. See page 93.

Central building management system

The operator can communicate with a CME pump at a distance. Communication can take place via a central building management system allowing the operator to monitor and change control modes and setpoint settings.

The communication interface between the CME pump and central building management systems varies, depending on pump size.

New-generation CME 0.75 to 7.5 Hp (supply voltages T, U, V)

This range of CME pumps can be fitted with a communication interface module (CIM). This means that no external communication interface is required.

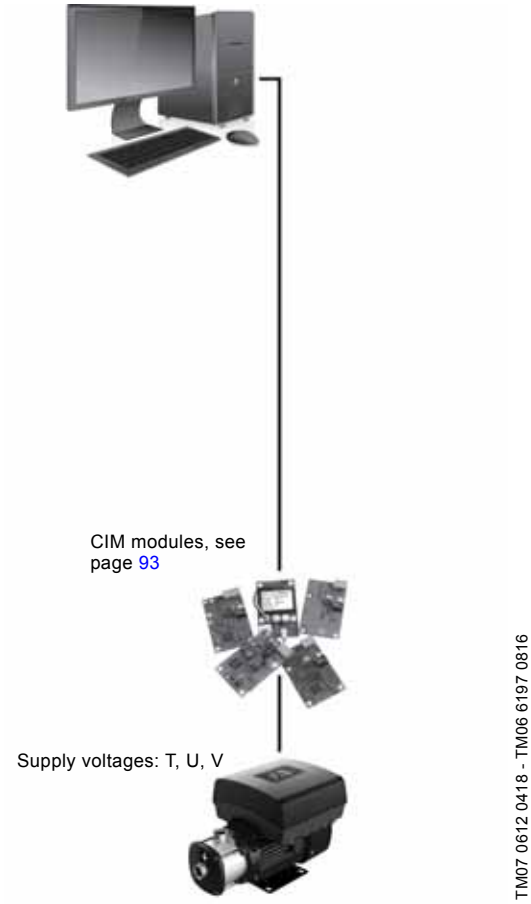

Fig. 24 Communication via a central building management system

Speed control of CME pumps

Affinity equations

Normally, CME pumps are used in applications characterized by a variable flow. Consequently, it is not possible to select a pump that is constantly operating at its optimum efficiency.

In order to achieve optimum operating economy, the duty point must be close to the optimum efficiency (eta) for most operating hours.

Between the min. and max. performance curves, CME pumps have an infinite number of performance curves, each representing a specific speed. It may therefore not be possible to select a duty point close to the max. curve.

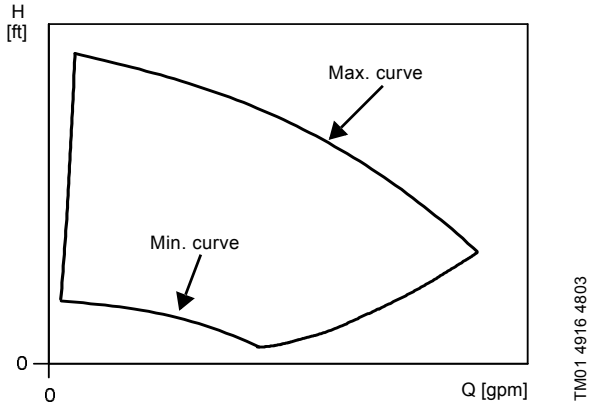

Fig. 25 Min. and max. performance curves

In situations where it is not possible to select a duty point close to the max. curve, use the affinity equations below. The head (H), the flow rate (Q) and the input power (P) are the appropriate variables for calculating the motor speed (n).

Note: The approximated formulas apply on condition that the system characteristic remains unchanged for n_n and n_x and that it is based on the formula $H = k \times Q^2$ where k is a constant.

The power equation implies that the pump efficiency is unchanged at the two speeds. In practice, this is not quite correct.

Finally, it is worth noting that the efficiency of the variable frequency drive and the motor must be taken into account if a precise calculation of the power saving resulting from a reduction of the pump speed is wanted.

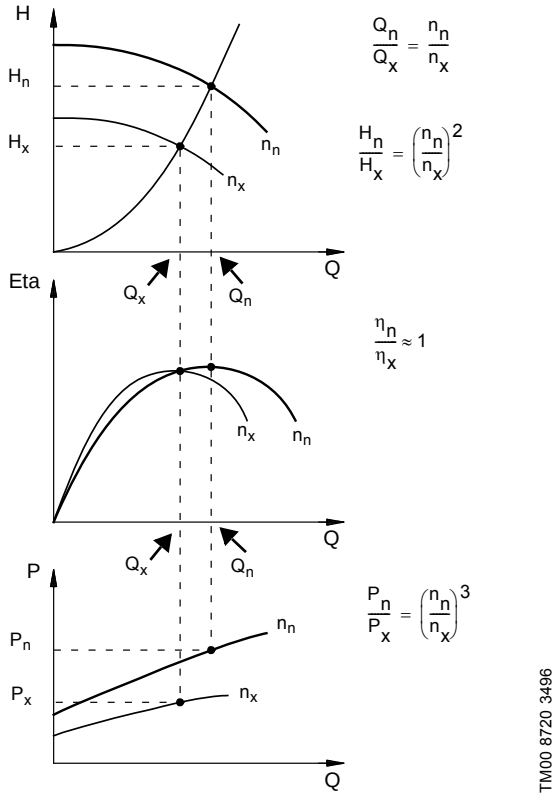

Fig. 26 Affinity equations

Legend

H_n	Rated head
H_x	Current head
Q_n	Rated flow rate
Q_x	Current flow rate
n_n	Rated motor speed
n_x	Current motor speed
η_n	Rated efficiency
η_x	Current efficiency

Grundfos Product Center

Grundfos Product Center is an online selection tool offered by Grundfos that makes it possible to calculate the specific duty point and energy consumption of a CME pump.

When you enter the dimensions of the pump, Grundfos Product Center can calculate the exact duty point and energy consumption. For further information, see page 105. Visit the Grundfos Product Center at http://product-selection.grundfos.com

CM connected to Grundfos CUE external variable frequency drive

Fig. 27 Grundfos CUE product range

Grundfos CUE is a complete range of external variable frequency drives (VFDs) for pump control in a wide range of applications. Grundfos CUE is designed for wall mounting.

Grundfos CUE provides a variety of benefits to the end-user.

The benefits include:

- Grundfos CME pump functionality and user interface
- application and pump family-related functions
- increased comfort compared to mains-operated pump solutions
- simple installation and commissioning compared to standard VFDs.

Functions

Intuitive startup guide

The startup guide enables easy installation and commissioning as well as plug-and-pump convenience. Few settings need to be made by the installer as the rest is done automatically or preset from the factory.

Smart user interface

TM04 3283 4108

Fig. 28 Grundfos CUE operating panel

Grundfos CUE features a unique user-friendly operating panel with graphic display and easy-to-use buttons.

Controlling the value you choose

Grundfos CUE has a built-in PI controller offering closed-loop control of a desired value.

The values include:

- constant differential-pressure
- proportional pressure
- constant temperature
- constant flow.

Wide product range

The CUE product range is quite comprehensive, covering five different voltage ranges, enclosure classes IP20/21 (Nema 1) and IP54/55 (Nema 12), and a wide range of output powers.

The table below provides a general overview.

Input voltage [V]	Output voltage [V]	Motor [Hp]
1 x 200-240	3 x 200-240	1.5 - 10
3 x 200-240	3 x 200-240	1-60
3 x 380-500	3 x 380-500	0.75 - 300
3 x 525-600	3 x 525-600	1-10

9. Approvals and markings

CM, CME pumps

Approvals

- RCM mark, New Zealand and Australian EMC.
- EAC certificate.

cULus

The cULus approval covers the standard product range within the following supply voltages:

- 1 x 115/230 V, 60 Hz (supply voltage B)
- 3 x 575 V, 60 Hz (supply voltage H, IE2)

Contact Grundfos for further information.

Pumps

UL778 and C22.2 No 108-01

NEMA 250 (IP code).

Overheating protection

UL2111 and C22.2 No 77-95.

Note: cULus/cURus-approved motors have no internal protection. Motors fitted with PTC/PTO have no cULus/cURus approval.

cURus IE3 motors

The cURus approval covers the IE3 motors mentioned in the following:

IE3 motors for the below listed supply voltages comply with UL1004-1 and CSA22.2 No. 100-04.

- 3 x 208-230/440-480 V, 60 Hz (supply voltage E).

cURus E-motors

The cURus approval covers the CME motors mentioned in the following:

CME motors for the below listed supply voltages comply with UL 60730-1 and CSA E 60730-1.

- 3 x 440-480 V, 50/60 Hz (supply voltage T)
- 1 x 200-230 V, 50/60 Hz (supply voltage U).
- 3 x 200-240 V, 50/60 Hz (supply voltage V).

Other approvals and compliance with directives

- EAC (Russia, Belarus, Kazakhstan)
- Compliance with RoHS, directive 2002/96/EC
- CCC
- CEL
- EuP
- KEA
- PSE.

Drinking water approvals

- WRAS
- ACS
- NSF61.

Energy approvals

The following energy approvals are available on request:

- Energy Independence and Security Act (EISA) for the USA (CC marking).
- Minimum energy performance standard (MEPS) for Korea, Taiwan, China and Brazil (pending).

Markings

10. Certificates

Certificate	Description
Certificate of compliance with the order	According to EN 10204, 2.1. Grundfos document certifying that the pump supplied is in compliance with the order specifications.
Test certificate. Non-specific inspection and testing	According to EN 10204, 2.2. Certificate with inspection and test results of a non-specific pump.
Inspection certificate 3.1	Grundfos document certifying that the pump supplied is in compliance with the order specifications. Inspection and test results are mentioned in the certificate.
Inspection certificate	Grundfos document certifying that the pump supplied is in compliance with the order specifications. Inspection and test results are mentioned in the certificate. Certificate from the surveyor is included. We offer the following inspection certificates: • Lloyds Register of Shipping (LRS) • Det Norske Veritas (DNV) • Germanischer Lloyd (GL) • Bureau Veritas (BV) • American Bureau of Shipping (ABS) • Registro Italiano Navale Agenture (RINA) • China Classification Society (CCS) • Russian maritime register of Shipping (RS) • Biro Klassifikasio Indonesia (BKI) • United States Coast Guard (USCG) • Nippon Kaiji Koykai (NKK).
Standard test report	Certifies that the main components of the specific pump are manufactured by Grundfos, and that the pump has been QH-tested, inspected and conforms to the full requirements of the appropriate catalogues, drawings and specifications.
Material specification report	Certifies the material used for the main components of the specific pump.
Material specification report with certificate from raw material supplier	Certifies the material used for the main components of the specific pump. A material certificate, EN 10204, 3.1, will be supplied for each main component.
Duty-point verification report	Certifies a test point specified by the customer. Issued according to ISO 9906:1999 concerning "Duty point verification".
Surface-roughness	Shows the measured roughness of the cast pump base of the specific pump. The report indicates the values measured at the base inlet and outlet according to ISO 1302.
Vibration report	Vibration report indicating the values measured during the performance test of the specific pump according to ISO 10816.
Motor test report	Shows the performance test of the specific motor, including power output, current, temperature, stator windings resistance and insulation test.
Cleaned and dried pump	Confirms that the specific pump has been cleaned and dried, and how it was done.
Electro-polished pump	Confirms that the specific pump has been electro-polished. The maximum surface roughness is specified in the report.

Examples of the certificates are shown on page 29.

Note: Other certificates are available on request.

Examples of certificates

Certificate of compliance with the order

BE > THINK > INNOVATE > GRUNDFOS

Certificate of compliance with the order

EN 10204 2.1

Customer name	
Customer order no.	
Customer Tag no.	
GRUNDFOS order no.	
Product type	

We the undersigned hereby guarantee and certify that the materials and/or parts for the above mentioned product were manufactured, tested, inspected, and conform to the full requirements of the appropriate catalogues, drawings and/or specifications relative thereto.

GRUNDFOS
Date:

Signature:
Name:
Dept.:

Part no. 96 50 78 95/1001002

TM03 4165 1706

Test certificate

BE > THINK > INNOVATE > GRUNDFOS

Test certificate
Non-specific inspection and testing

EN 10204 2.2

Customer name	
Customer order no.	
Customer TAG no.	
GRUNDFOS order no.	

Pump		
Pump type		Part number
Motor make		Part number
Flow	m^3/h	
Head	m	
Power P2	kW	
Voltage	V	
Frequency	Hz	
Full load current	A	
Motor speed	min^{-1}	

We the undersigned hereby guarantee and certify that the materials and/or parts for the above mentioned product were manufactured, tested, inspected, and conform to the full requirements of the appropriate catalogues, drawings and / or specifications relative thereto.

GRUNDFOS
Date:

Signature:
Name:
Dept.:

Part no 96 50 78 96/1001002

TM03 4163 1706

Inspection certificate 3.1

BE > THINK > INNOVATE > GRUNDFOS

Inspection certificate.
EN 10204 3.1

Manufactured by	
GRUNDFOS order no.	
GRUNDFOS DUT id.	
Customer order no.	
Customer name and address	
Shipyard / factory	
Ship / new building	
Customer TAG no.	
Classifying society	**GRUNDFOS authorized department**

Pump		**Motor**	
Pump type		Make	
Part number		Part number	
Serial no.		Serial No.	
Flow rate (m^3/h)		P2 (kW)	
Head (m)		Voltage (V)	
Max. ope. P/t (bar / °C)		Current (A)	
	Din / W. - No.	$n(min^{-1})$	
Base/Pump head cover		Frequency (Hz)	
Impeller/guidevanes		Insulation class	
Shaft/sleeve		Power factor	

Customer's requirements			
Flow rate (m^3/h)		Head (m)	

Test result ref. requirements									
$Q(m^3/h)$		H(m)		$n(min^{-1})$		I(A)		P1(kW)	

Hydrostatic test		Bar – no leaks or deformation observed

GRUNDFOS
Date:

Signature:
Name:
Dept.:

Part no. 96 50 78 97/1014142

TM03 4162 3607

Inspection certificate

BE > THINK > INNOVATE > GRUNDFOS

Inspection certificate.
Russian Maritime Register of Shipping

Manufactured by	
GRUNDFOS order no.	
GRUNDFOS DUT id.	
Customer order no.	
Customer name and address	
Shipyard / factory	
Ship / new building	
Customer TAG no.	
Classifying society	**Russian Maritime Register of Shipping (RS)**

Pump		**Motor**	
Pump type		Make	
Part number		Part number	
Serial no.		Serial No.	
Flow rate (m^3/h)		P2 (kW)	
Head (m)		Voltage (V)	
Max. ope. P/t (bar / °C)		Current (A)	
Service		$n(min^{-1})$	
Medium		Frequency (Hz)	
	Din / W. - No.	Insulation class	
Base/Pump head cover		Power factor	
Impeller/guidevanes			
Shaft/sleeve			

Customer's requirements			
Flow rate (m^3/h)		Head (m)	

Test result ref. requirements									
$Q(m^3/h)$		H(m)		$n(min^{-1})$		I(A)		P1(kW)	

Hydrostatic test		Bar – no leaks or deformation observed
The pump has been marked		

Surveyor signature: _____
Tested date: _____

GRUNDFOS
Date:

Signature:
Name:
Dept.:

Part no. 96 50 79 25/1014142

TM03 4156 3607

Standard test report

BE > THINK > INNOVATE > GRUNDFOS

Standard test report

Customer name	
Customer order no.	
Customer Tag no.	
GRUNDFOS order no.	
Product type	
GRUNDFOS DUT id.	
Part number	

We the undersigned hereby guarantee and certify that the materials and/or parts for the above mentioned product were manufactured by GRUNDFOS, tested, inspected, and conform to the full requirements of the appropriate catalogues, drawings and/or specifications relative thereto.
The attached test result is from the above mentioned pump.

GRUNDFOS
Date:

Signature:
Name:
Dept.:

Part no. 96 50 79 30 P01 /A72775

TM03 4143 1706

Material specification report

BE > THINK > INNOVATE > GRUNDFOS

Material specification report.

Customer name	
Customer order no.	
Customer TAG no.	
GRUNDFOS order no.	
Pump type	
GRUNDFOS DUT id.	
Part number	
Production code	

Pump	Materials	DIN W.-Nr.	AISI / ASTM
Pump head			
Pump head cover			
Shaft			
Impeller			
Chamber			
Outer sleeve			
Base			

We the undersigned hereby guarantee and certify that the materials and/or parts for the above mentioned product were manufactured, tested, inspected, and conform to the full requirements of the appropriate catalogues, drawings and/or specifications relative thereto.

GRUNDFOS
Date:

Signature:
Name:
Dept.:

Part no 96 50 79 28/A72775

TM03 4150 1706

Material specification report with certificate from raw material supplier

BE > THINK > INNOVATE > GRUNDFOS

Material specification report with EN10204 3.1 material certificate from raw material supplier

Customer name	
Customer order no.	
Customer TAG no.	
GRUNDFOS order no.	
Pump type	
GRUNDFOS DUT id.	
Part number	
Production code	

Pump	Raw materiel no.	Supplier certificate no.
Pump head		
Pump head cover		
Shaft		
Impeller		
Chamber		
Outer sleeve		
Base		

We the undersigned hereby guarantee and certify that the materials and/or parts for the above mentioned product were manufactured, tested, inspected, and conform to the full requirements of the appropriate catalogues, drawings and/or specifications relative thereto.

GRUNDFOS
Date:

Signature:
Name:
Dept.:

Part no 96 50 79 29/A72775

TM03 4149 3607

Duty-point verification report

BE > THINK > INNOVATE > GRUNDFOS

Duty point verification report

Customer name	
Customer order no.	
Customer Tag no.	
GRUNDFOS order no.	
Product type	
GRUNDFOS DUT id.	
Part number	

We the undersigned hereby guarantee and certify that the materials and/or parts for the above mentioned product were manufactured by GRUNDFOS, tested, inspected, and conform to the full requirements of the appropriate catalogues, drawings and/or specifications relative thereto.

GRUNDFOS
Date:

Signature:
Name:
Dept.:

Part no. 96 53 96 99 /A72775

TM03 4148 1706

11. Selection and sizing

Selection of pumps

Selection of pumps must be based on these elements:

- the duty point of the pump (see fig. 29)
- dimensional data such as pressure loss as a result of height differences, friction loss in the pipes, pump efficiency, etc. (see fig. 30)
- pump materials (see *6. Construction* on page 14)
- pump connections (see page 32)
- shaft seal (see page 33).

Duty point of the pump

From a duty point it is possible to select a pump on the basis of the curve charts starting on page 35.

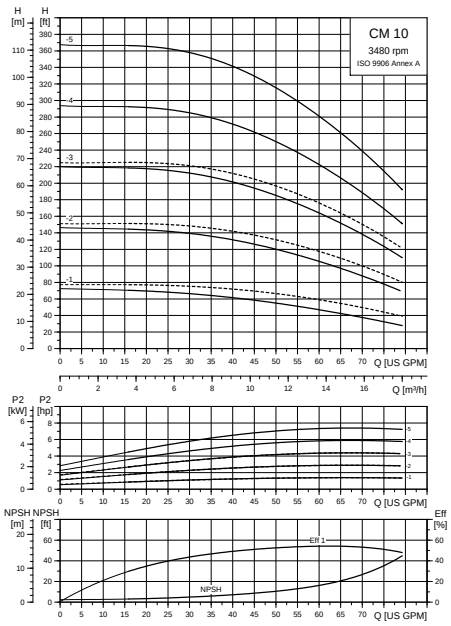

TM04 5899 3610

Fig. 29 Example of a curve chart

Dimensional data

When sizing a pump, take the following factors into account:

- Required flow rate and pressure at the draw-off point.
- Pressure loss as a result of height differences (H_{geo}).
- Friction loss in the pipes (H_f).
  It may be necessary to account for pressure loss in connection with long pipes, bends or valves, etc.
- Best efficiency at the estimated duty point.*
- NPSH value.
  For calculation of the NPSH value, see *Minimum inlet pressure* on page 20.

* See *Selection of CME pumps* on page 33 for further information about sizing CME pumps.

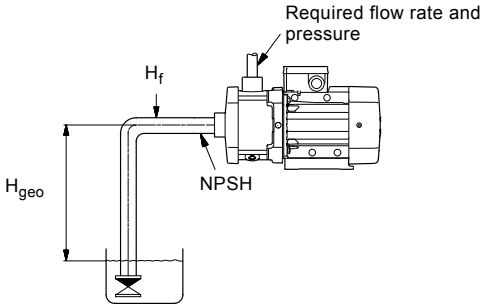

TM04 3486 4508

Fig. 30 Dimensional data

Pump efficiency

When sizing the pump, the efficiency (eta) must be considered so that the pump will operate at or near its maximum efficiency, for instance on the right-hand side in the curve example in fig. 31.

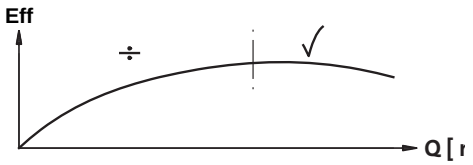

TM00 9190 1303

Fig. 31 Best efficiency

Before determining the best efficiency point, the operation pattern of the pump needs to be identified. If the pump is expected to operate at the same duty point, then select a CM pump which is operating at a duty point corresponding with the best efficiency of the pump. The example in fig. 32 shows how to check the pump efficiency when selecting a CM pump.

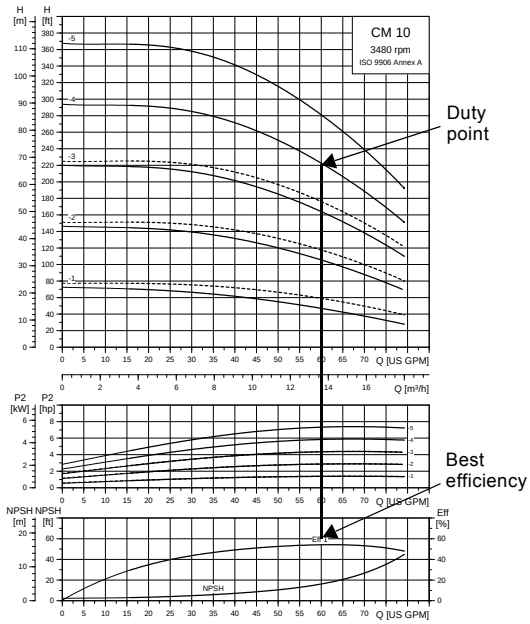

TM04 5899 3610

Fig. 32 Example of a CM pump's duty point

Pump materials

Select the material variant on the basis of the liquid to be pumped. The table below gives a general recommendation regarding selection of pump material.

Liquid to be pumped	Material in contact with pump media	Pump type
Clean, non-aggressive liquids such as potable water and oils	Cast iron* (A48 CL30 / EN-GJL-200)	CM, CME-A
Industrial liquids and acids	Stainless steel (AISI 304 / EN 1.4301)	CM, CME-I
	Stainless steel (AISI 316 / EN 1.4401)	CM, CME-G

* The impeller, chamber and filling plugs are made of stainless steel (AISI 304 / EN 1.4301).
The pump shaft is made of stainless steel (AISI 431 / EN 1.4057).

For more specific selection based on the pumped liquid, see *19. Accessories* on page 90, or contact Grundfos.

Pump connections

TM04 3937 0409

Fig. 33 Examples of pump connections

Selection of pump connection depends on the rated pressure and the pipes. To meet any requirement, the CM and CME pumps offer a wide range of flexible connections such as:

- internal NPT thread
- Whitworth thread Rp
- DIN flange
- Tri-Clamp®
- ANSI flange
- JIS flange
- PJE coupling.

CM and CME pumps come standard with NPT fittings (see dimensions on pages 47 to 72).

Selection of shaft seal

As standard, the CM and CME pumps are fitted with a Grundfos O-ring type shaft seal with fixed driver suitable for the most common applications.

TM04 3934 0409

Fig. 34 Shaft seal (O-ring type with fixed driver)

The table below shows the available shaft seal types for CM and CME pumps.

Pump type	Shaft seal type	Material	Rubber parts
CM, CME	AQQE AQQV AQQK AVBE AVBV	Stainless steel	EPDM (E) FKM (V) FFKM (K)

These key parameters must be taken into account when selecting the shaft seal:

- type of pumped liquid
- liquid temperature
- maximum pressure.

Use fig. 20 on page 22 to select a suitable shaft seal. If the pumped liquid differs from water, a suitable shaft seal can be found in section *19. Accessories* on page 90.

Note: The list must be applied with some caution, as factors such as concentration of the pumped liquid, liquid temperature or pressure may affect the chemical resistance of a specific pump version.

Selection of CME pumps

CME pumps are normally used in applications characterized by a variable flow. Consequently, it is not possible to select a pump that is constantly operating at its optimum efficiency. In order to achieve optimum operating economy, the duty point must therefore be close to the optimum efficiency (eff) for most operating hours. For further information, see section *8. CME pumps* on page 23.

Note: Irrespective of the input frequency, the 100 % speed of CME pumps is approximately 3400 rpm, corresponding to an input frequency of 60 Hz. For example, if the input frequency is 50 Hz, the 100 % speed will still be approximately 3400 rpm. See CME performance curves on pages 41 to 46.Constant-pressure control application

A pump supplies tap water from a break tank to various taps in a building.

The demand for tap water varies, and so does the system characteristic, according to the required flow rate. To achieve comfort and energy savings, a constant supply pressure is recommended.

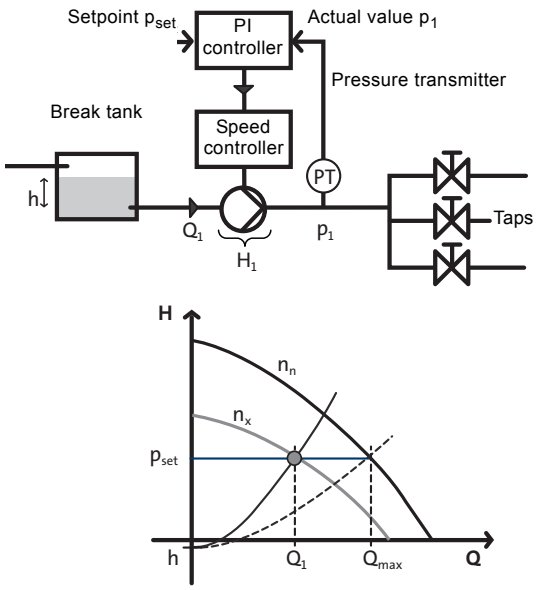

TM03 0410 5004

Fig. 35 Constant-pressure control

As appears from fig. 35, the solution is a speed-controlled pump with a PI controller. The PI controller compares the required pressure, p_{set}, with the actual supply pressure, p_1, measured by a pressure transmitter PT.

If the actual pressure is higher than the setpoint, the PI controller reduces the speed and consequently the performance of the pump until $p_1 = p_{set}$. Figure 35 shows what happens when the flow rate is reduced from $Q_{max.}$ to Q_1.

The controller reduces the speed of the pump from n_n to n_x in order to ensure that the required outlet pressure is $p_1 = p_{set}$. The pump ensures that the supply pressure is constant in the flow range of 0 to $Q_{max.}$. The supply pressure is independent of the level (h) in the break tank. If h changes, the PI controller adjusts the speed of the pump so that p_1 always corresponds to the setpoint.

12. How to read the curve charts

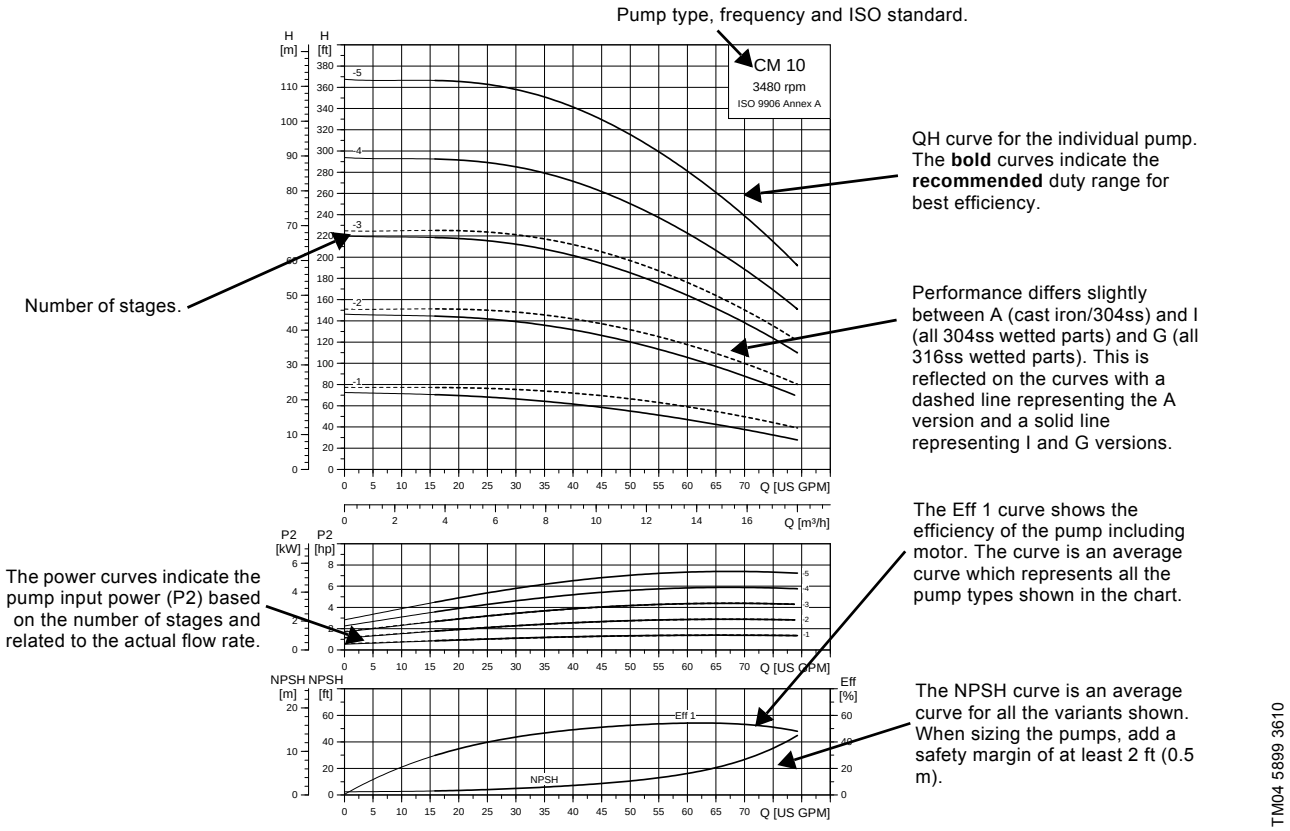

Fig. 36 How to read the curve charts

Guidelines to performance curves

The guidelines below apply to the curves shown on the following pages:

- Tolerances to ISO 9906, Annex A, if indicated.
- The motors used for the measurements are the specifically designed motors for CM and CME pumps. The motors are based on Grundfos standard motors (ML or MLE).
- Measurements have been made with airless water at a temperature of 68 °F (20 °C).
- The curves apply to the following kinematic viscosity: υ = 1 cSt (1 mm^2/s).
- The QH curves apply to rated motor speeds of approximately 3400 rpm (60 Hz). All curves are based on current motor speeds. The QH curves apply to a fixed speed of 3480 rpm for CM pumps. CME QH curves apply to a fixed speed of 3480 rpm. **Note:** Please refer to the Grundfos Product Center online selection tool for more precise curves. In Grundfos Product Center, it is also possible to adjust the curves depending on the density and viscosity.
- When the motor is running at the lowest or highest rated voltage, the pump performance will usually vary by ± 2-4 ft at a given duty point.
- All curves are based on pumps fitted with a three-phase motor.
- CM pumps using single-phase or three-phase motors may differ in performance. For curves corresponding to specific motors please refer to Grundfos Product Center.
- Due to the risk of overheating, the pumps may not be used at a flow rate below the minimum flow rate. The curve in fig. 37 shows the minimum flow rate as a percentage of the rated flow rate in relation to the liquid temperature.

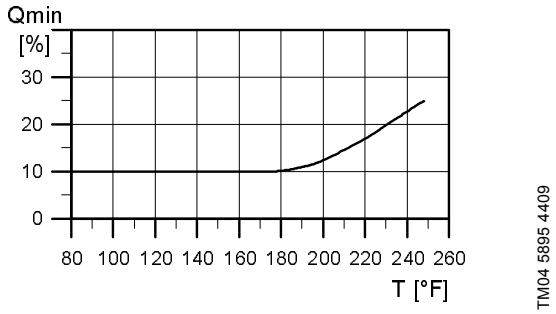

Fig. 37 Minimum flow rate

13. Performance curves

CM 1

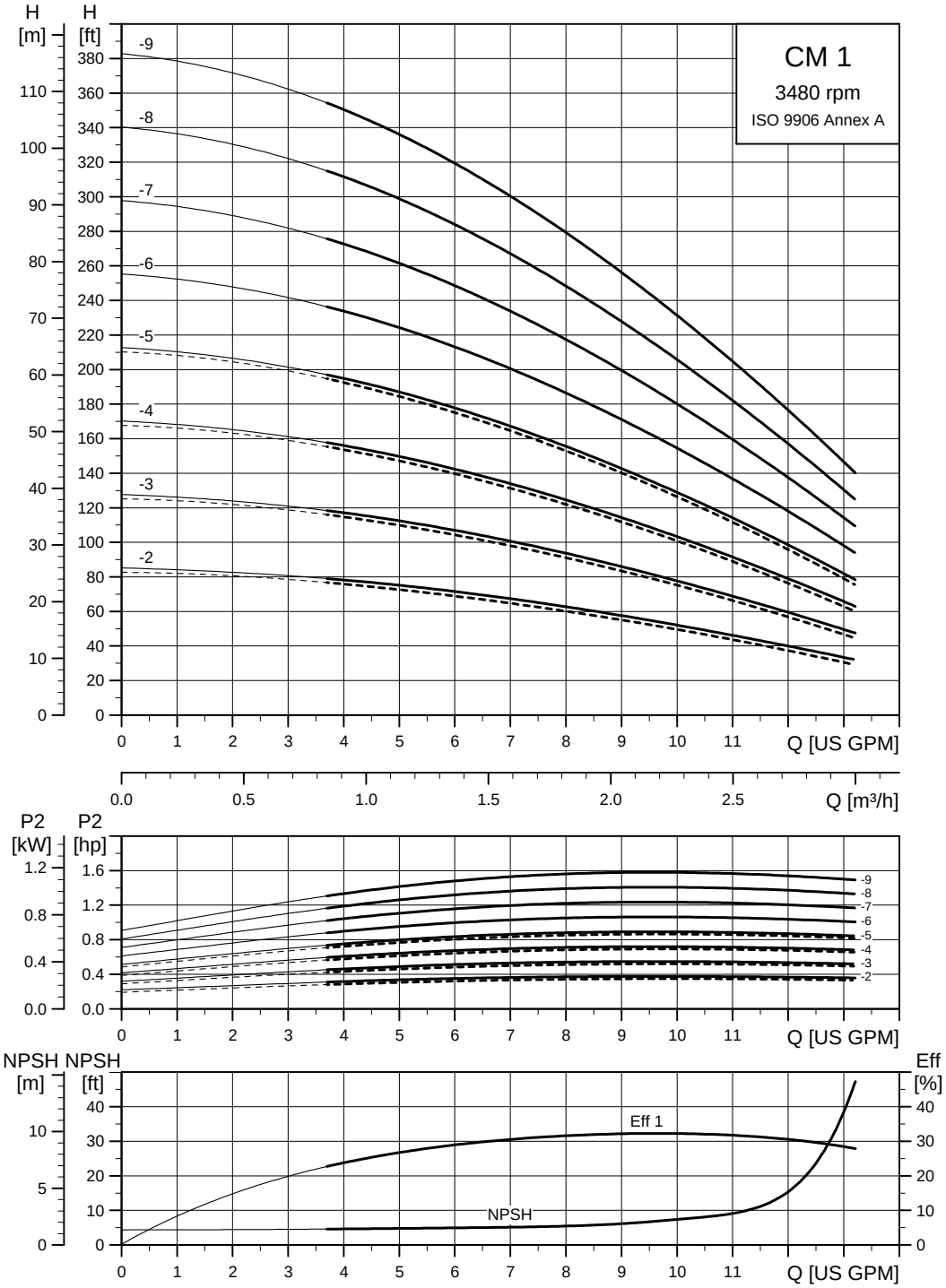

Eff1 = Wire-to-water efficiency of the pump including motor (see page 34).
- - - - -A version
———I, G versions

CM 3

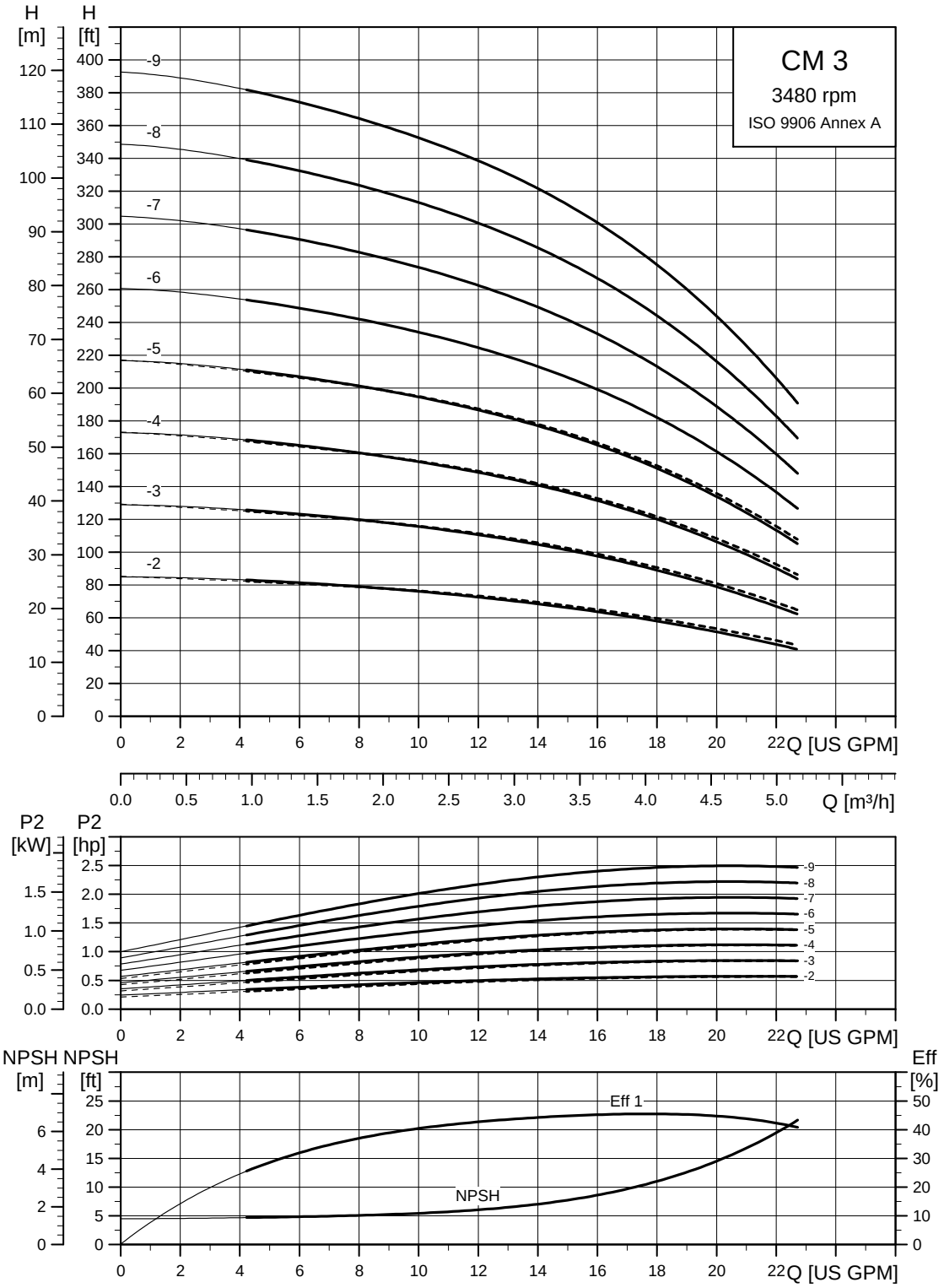

Eff1 = Wire-to-water efficiency of the pump including motor (see page 34).
- - - - -A version
———I, G versions

CM 5

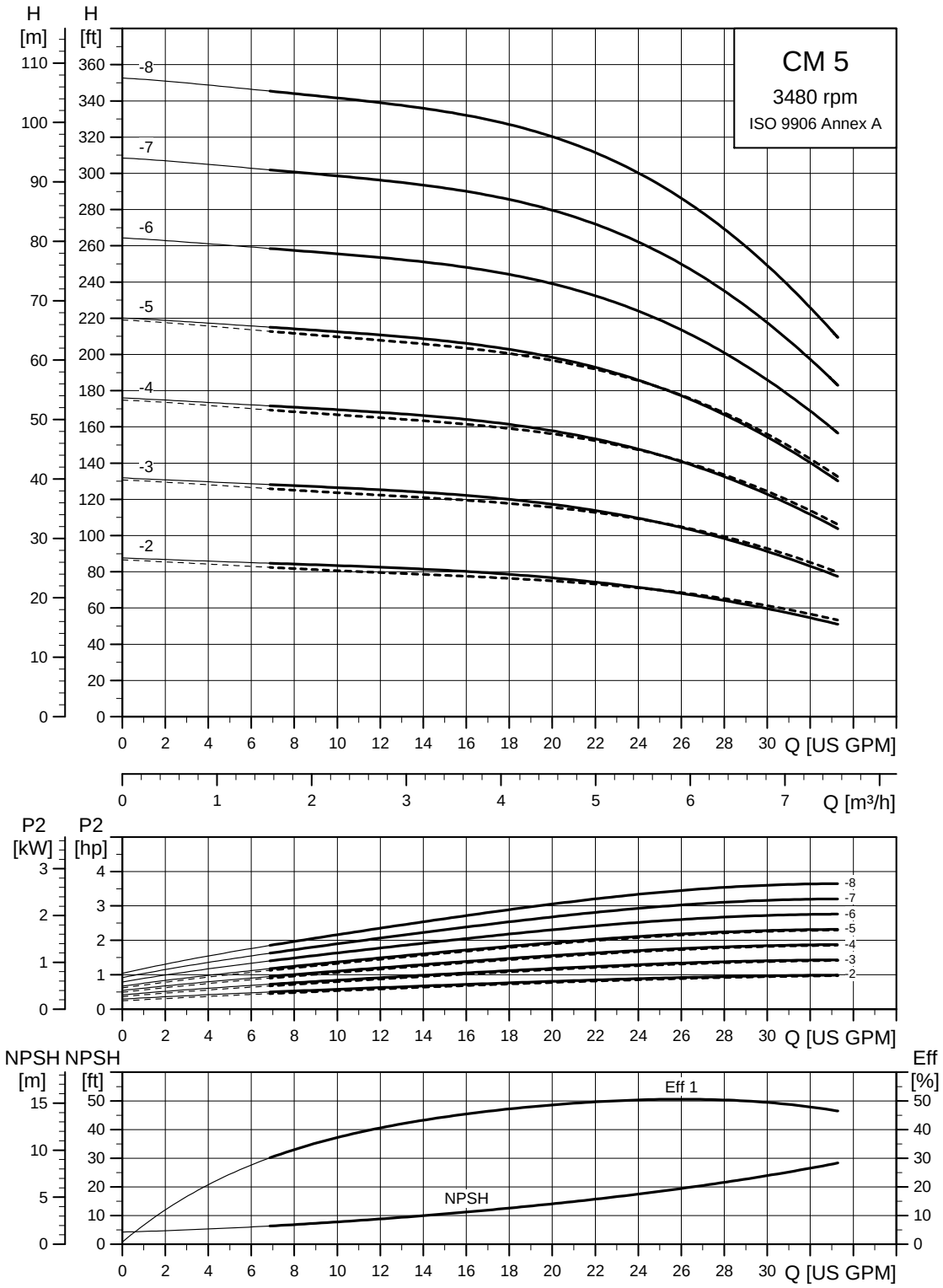

Eff1 = Wire-to-water efficiency of the pump including motor (see page 34).
- - - - -A version
———I, G versions

CM 10

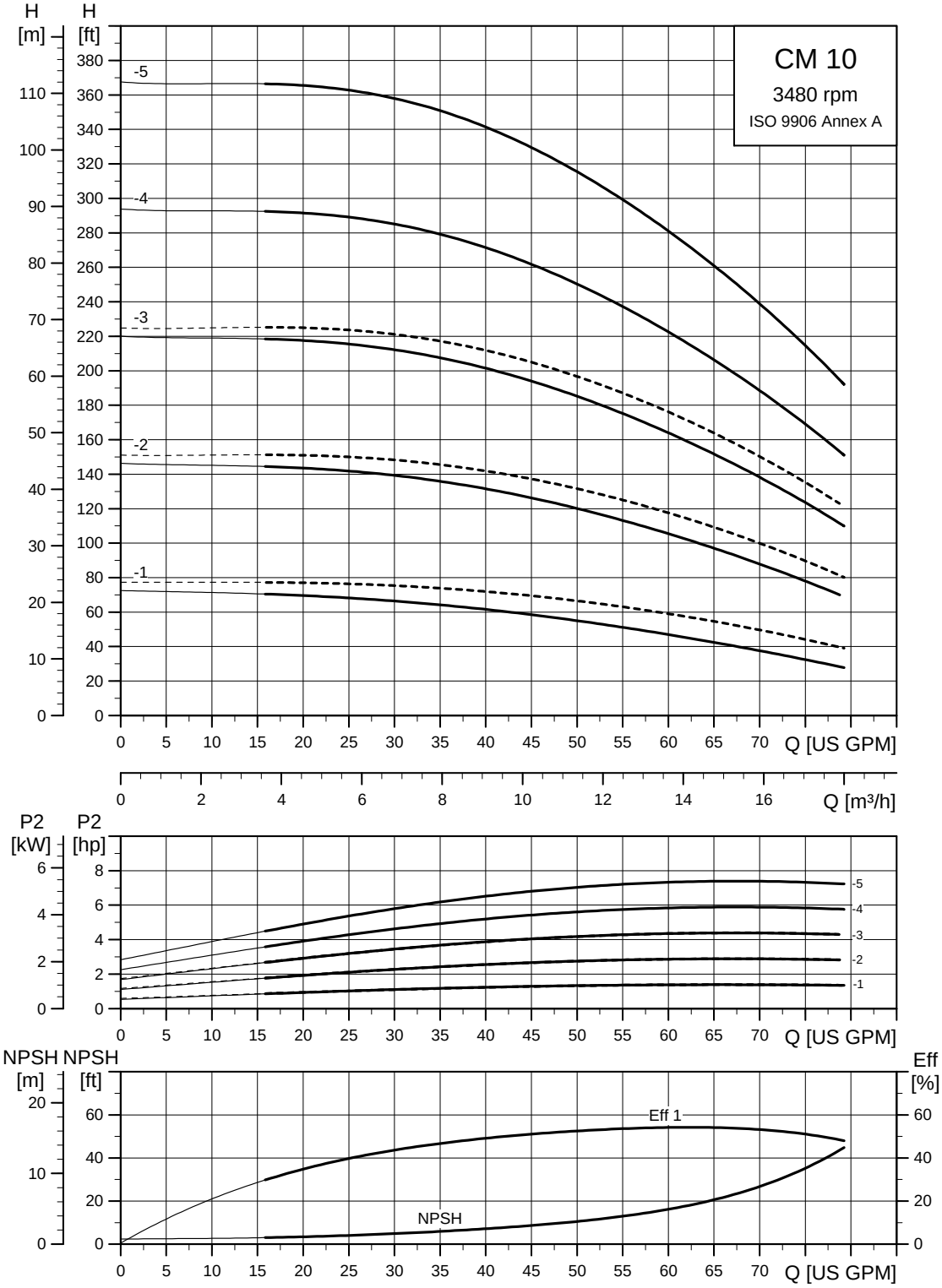

Eff1 = Wire-to-water efficiency of the pump including motor (see page 34).
- - - - -A version
———I, G versions

CM 15

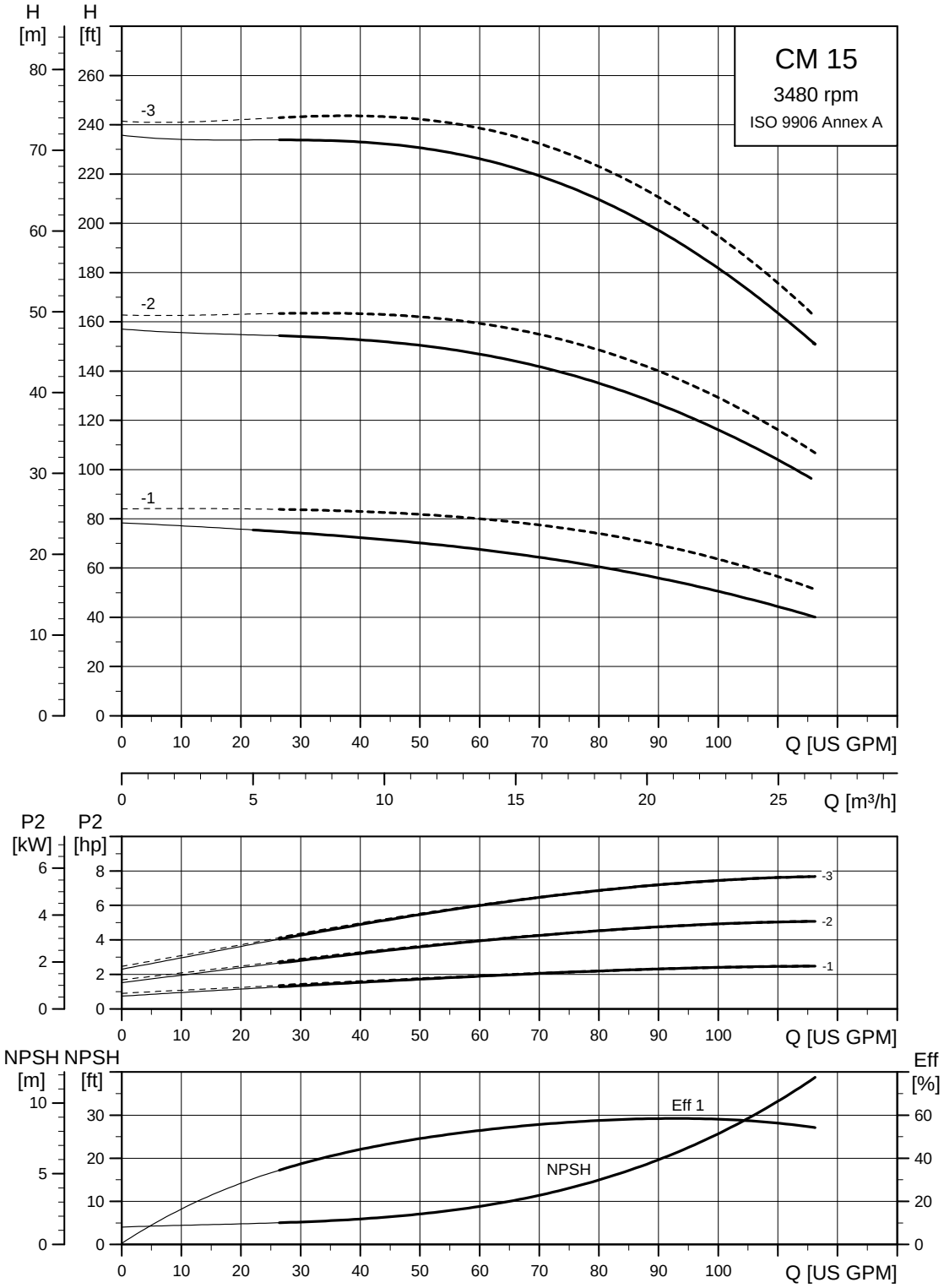

Eff1 = Wire-to-water efficiency of the pump including motor (see page 34).
- - - - -A version
———I, G versions

CM 25

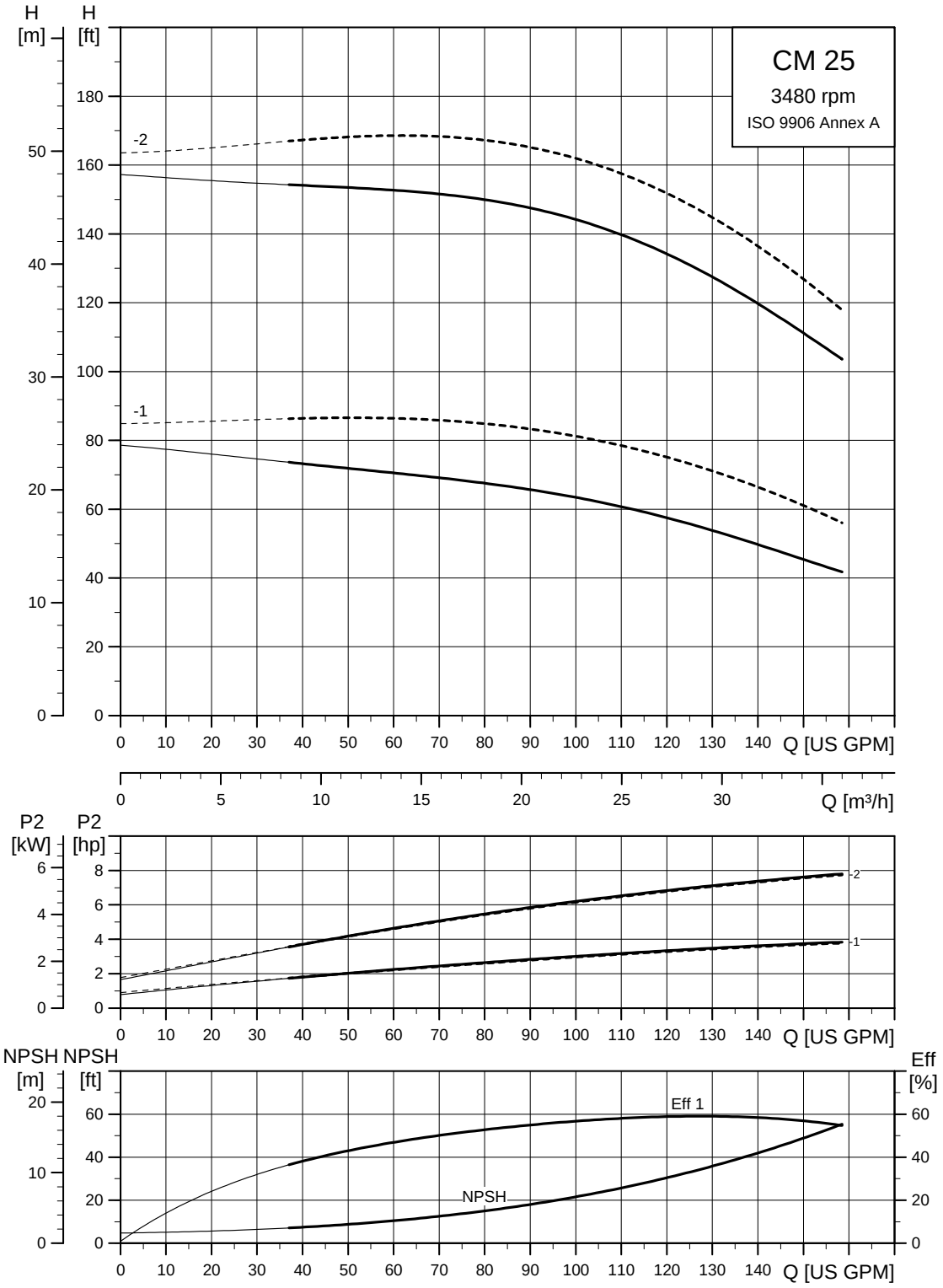

Eff1 = Wire-to-water efficiency of the pump including motor (see page 34).
- - - - -A version
———I, G versions

CME 1

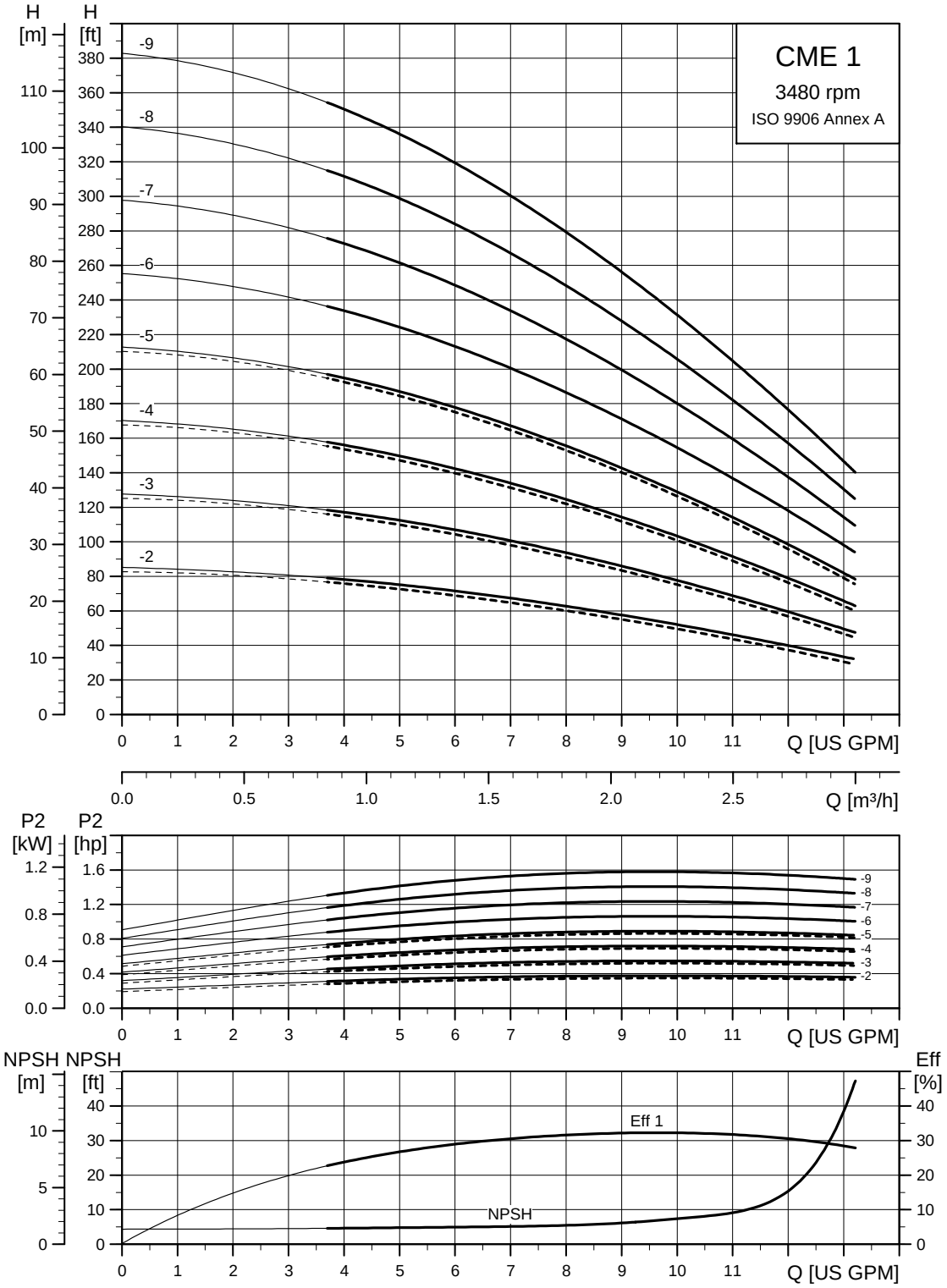

Eff1 = Wire-to-water efficiency of the pump including motor (see page 34).
- - - - -A version
———I, G versions
Note: Irrespective of the input frequency, the 100 % speed of the CME pumps is approximately 3400 rpm.

CME 3

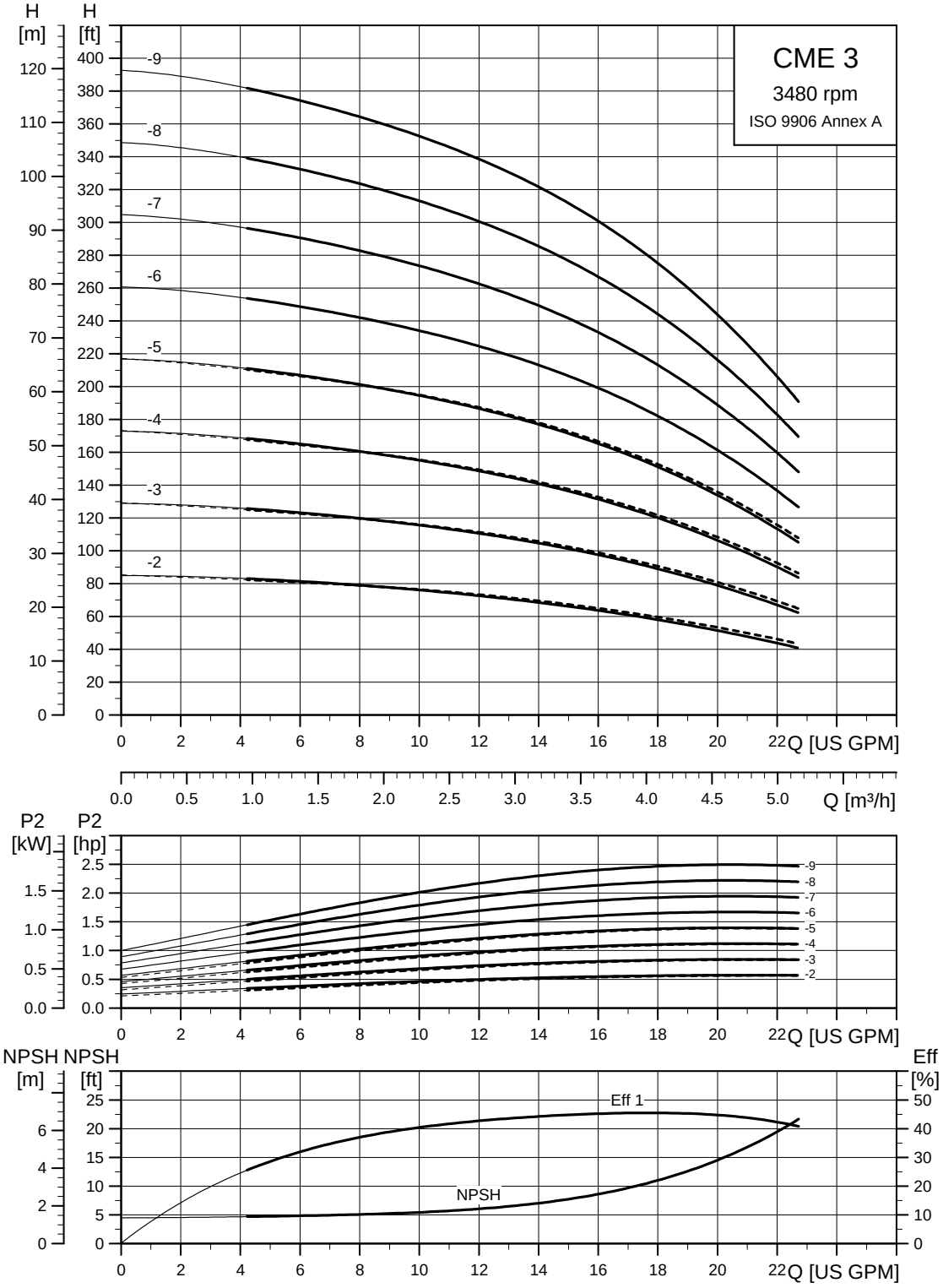

Eff1 = Wire-to-water efficiency of the pump including motor (see page 34).
- - - - -A version
———I, G versions
Note: Irrespective of the input frequency, the 100 % speed of the CME pumps is approximately 3400 rpm.

CME 5

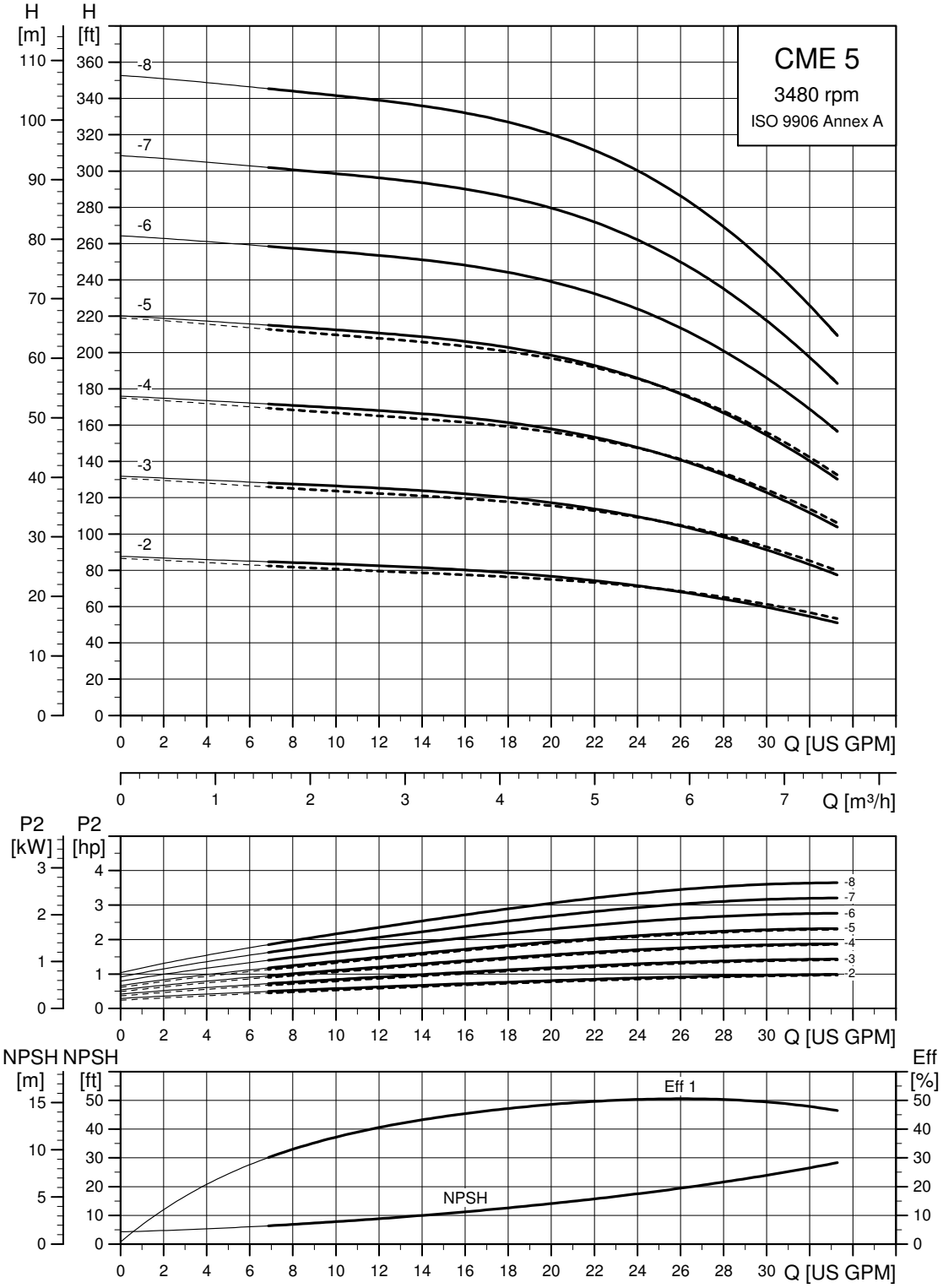

Eff1 = Wire-to-water efficiency of the pump including motor (see page 34).
- - - - -A version
———I, G versions
Note: Irrespective of the input frequency, the 100 % speed of the CME pumps is approximately 3400 rpm.

CME 10

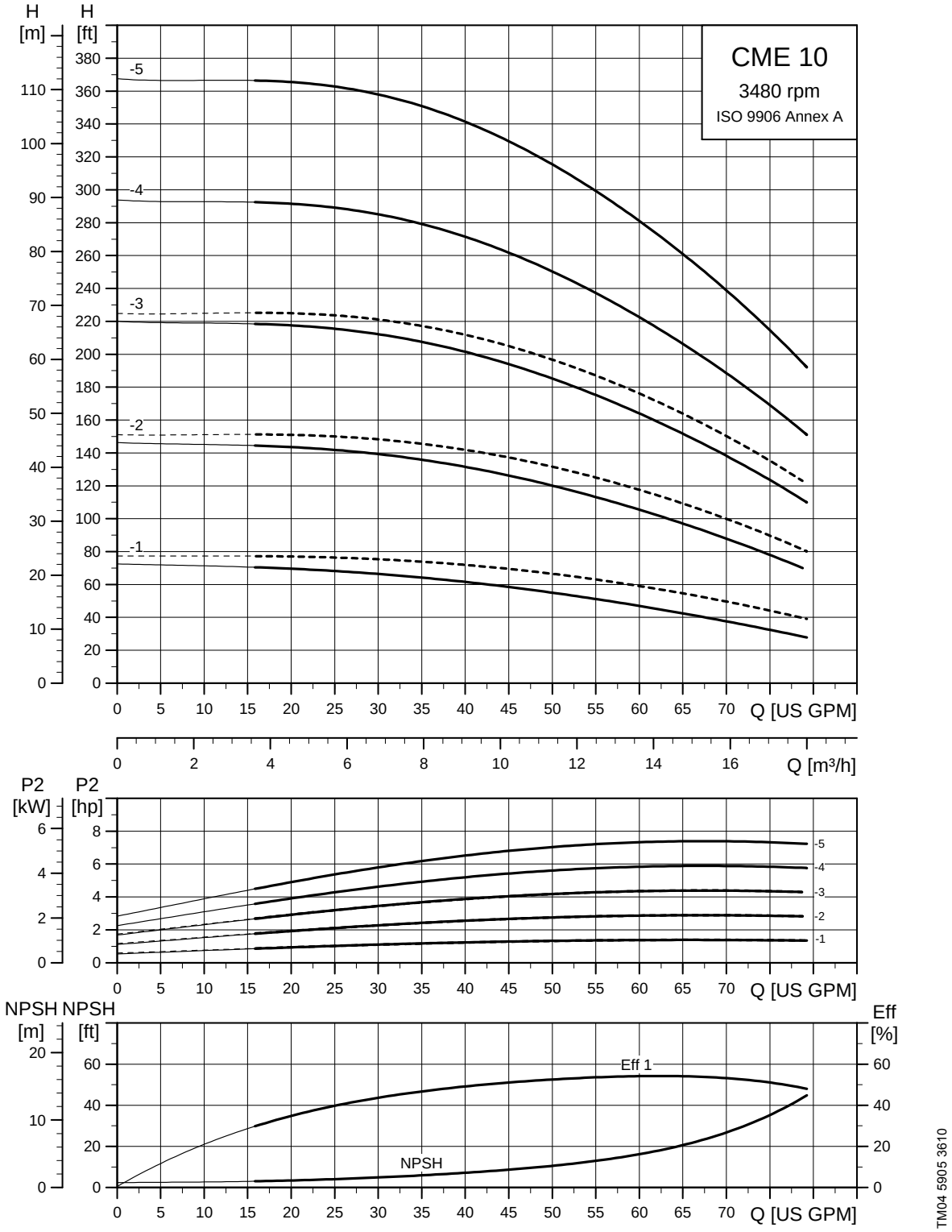

Eff1 = Wire-to-water efficiency of the pump including motor (see page 34).
- - - - -A version
———I, G versions
Note: Irrespective of the input frequency, the 100 % speed of the CME pumps is approximately 3400 rpm.

CME 15

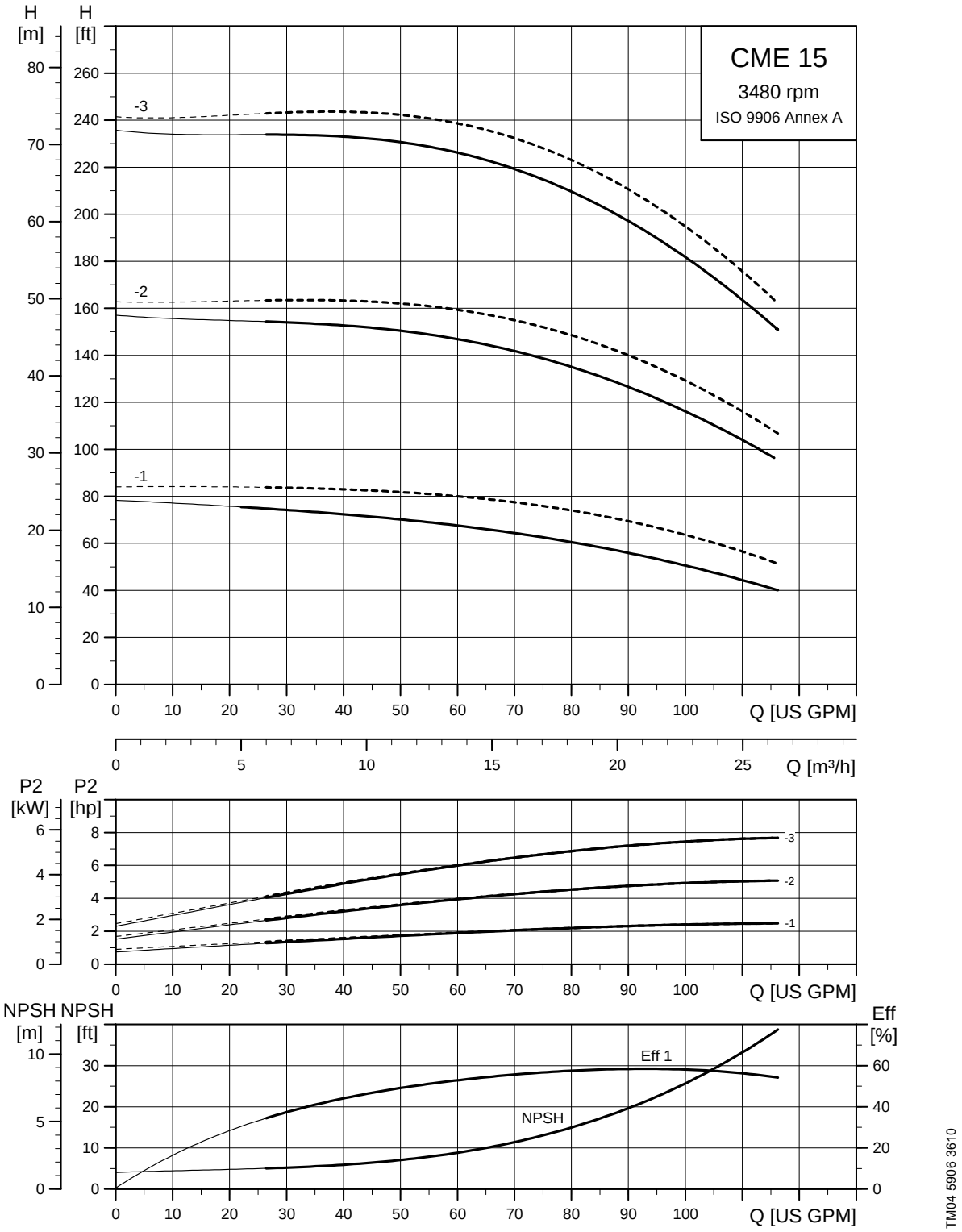

Eff1 = Wire-to-water efficiency of the pump including motor (see page 34).
- - - - -A version
———I, G versions
Note: Irrespective of the input frequency, the 100 % speed of the CME pumps is approximately 3400 rpm.

CME 25

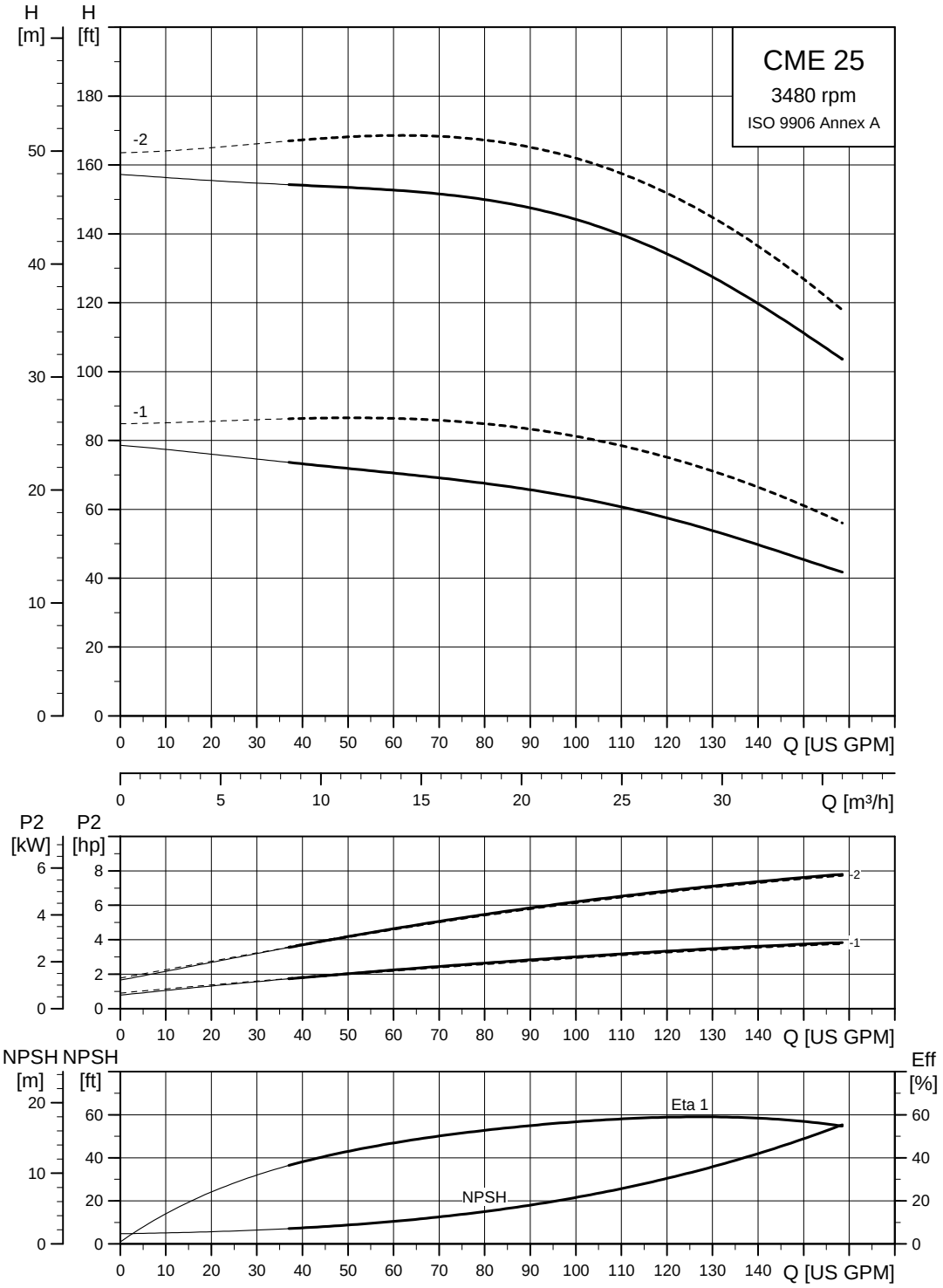

Eff1 = Wire-to-water efficiency of the pump including motor (see page 34).
- - - - -A version
———I, G versions
Note: Irrespective of the input frequency, the 100 % speed of the CME pumps is approximately 3400 rpm.

14. Technical data

CM 1-A

(A = cast iron, A48 CL30 / EN-GJL-200)

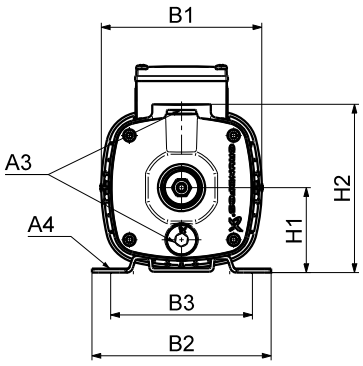

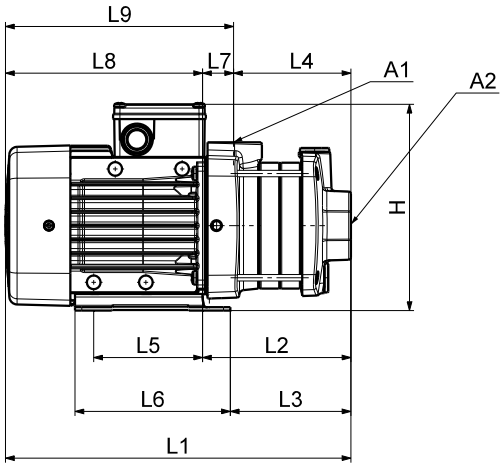

TM04 2248 2208

Dimensions

3 x 208-230 V / 440-480 V, 60 Hz (supply voltage E)

3 x 575 V, 60 Hz (supply voltage H)

Pump type	Frame size	P_2 [Hp]	NPT		Rp	Dimensions [inches (mm)]															
			A1	A2	A3	A4	B1	B2	B3	H	H1	H2	L1	L2	L3	L4	L5	L6	L7	L8	L9
CM 1-2	71	0.58	1"	1"	3/8"	0.39 (10)	5.59 (142)	6.22 (158)	4.92 (125)	7.52 (191)	2.95 (75)	5.87 (149)	11.34 (288)	4.49 (114)	3.50 (89)	3.39 (86)	3.78 (96)	5.39 (137)	1.10 (28)	6.85 (174)	7.95 (202)
CM 1-3	71	0.58	1"	1"	3/8"	0.39 (10)	5.59 (142)	6.22 (158)	4.92 (125)	7.52 (191)	2.95 (75)	5.87 (149)	12.05 (306)	5.20 (132)	4.21 (107)	4.09 (104)	3.78 (96)	5.39 (137)	1.10 (28)	6.85 (174)	7.95 (202)
CM 1-4	71	1.0	1"	1"	3/8"	0.39 (10)	5.59 (142)	6.22 (158)	4.92 (125)	7.52 (191)	2.95 (75)	5.87 (149)	12.76 (324)	5.91 (150)	4.92 (125)	4.80 (122)	3.78 (96)	5.39 (137)	1.10 (28)	6.85 (174)	7.95 (202)
CM 1-5	71	1.0	1"	1"	3/8"	0.39 (10)	5.59 (142)	6.22 (158)	4.92 (125)	7.52 (191)	2.95 (75)	5.87 (149)	13.46 (342)	6.61 (168)	5.63 (143)	5.51 (140)	3.78 (96)	5.39 (137)	1.10 (28)	6.85 (174)	7.95 (202)

1 x 115/230 V, 60 Hz (supply voltage B)

Pump type	Frame size	P_2 [Hp]	NPT		Rp	Dimensions [inches (mm)]															
			A1	A2	A3	A4	B1	B2	B3	H	H1	H2	L1	L2	L3	L4	L5	L6	L7	L8	L9
CM 1-2	71	0.8	1"	1"	3/8"	0.39 (10)	5.59 (142)	6.22 (158)	4.92 (125)	8.19 (208)	2.95 (75)	5.87 (149)	11.34 (288)	4.49 (114)	3.50 (89)	3.39 (86)	3.78 (96)	5.39 (137)	1.10 (28)	6.85 (174)	7.95 (202)
CM 1-3	71	0.8	1"	1"	3/8"	0.39 (10)	5.59 (142)	6.22 (158)	4.92 (125)	8.19 (208)	2.95 (75)	5.87 (149)	12.05 (306)	5.20 (132)	4.21 (107)	4.09 (104)	3.78 (96)	5.39 (137)	1.10 (28)	6.85 (174)	7.95 (202)
CM 1-4	71	0.8	1"	1"	3/8"	0.39 (10)	5.59 (142)	6.22 (158)	4.92 (125)	8.19 (208)	2.95 (75)	5.87 (149)	12.76 (324)	5.91 (150)	4.92 (125)	4.80 (122)	3.78 (96)	5.39 (137)	1.10 (28)	6.85 (174)	7.95 (202)
CM 1-5	71	0.8	1"	1"	3/8"	0.39 (10)	5.59 (142)	6.22 (158)	4.92 (125)	8.19 (208)	2.95 (75)	5.87 (149)	13.46 (342)	6.61 (168)	5.63 (143)	5.51 (140)	3.78 (96)	5.39 (137)	1.10 (28)	6.85 (174)	7.95 (202)

CM 1-I and CM 1-G

(I = AISI 304 / EN 1.4301 and G = AISI 316 / EN 1.4401)

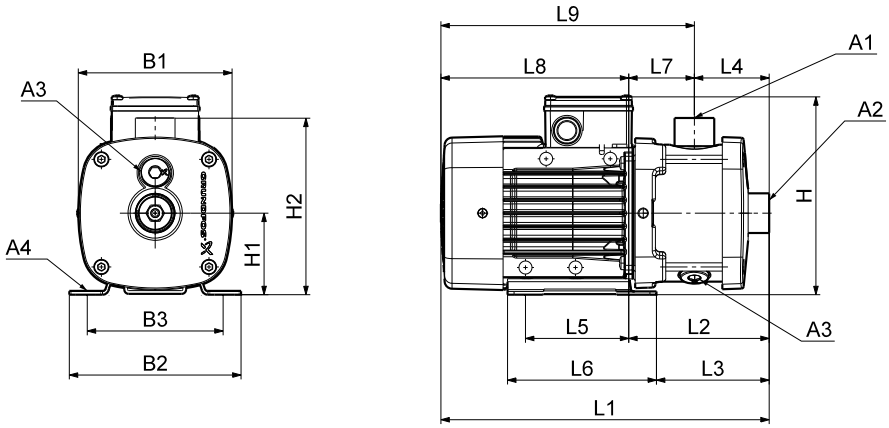

Dimensions

3 x 208-230 V / 440-480 V, 60 Hz (supply voltage E)

3 x 575 V, 60 Hz (supply voltage H)

Pump type	Frame size	P_2 [Hp]	NPT		Rp	Dimensions [inches (mm)]															
			A1	A2	A3	A4	B1	B2	B3	H	H1	H2	L1	L2	L3	L4	L5	L6	L7	L8	L9
CM 1-2	71	0.58	1"	1"	3/8"	0.39 (10)	5.59 (142)	6.22 (158)	4.92 (125)	7.52 (191)	2.95 (75)	6.50 (165)	12.01 (305)	5.16 (131)	4.21 (107)	2.83 (72)	3.78 (96)	5.39 (137)	2.36 (60)	6.85 (174)	9.21 (234)
CM 1-3	71	0.58	1"	1"	3/8"	0.39 (10)	5.59 (142)	6.22 (158)	4.92 (125)	7.52 (191)	2.95 (75)	6.50 (165)	12.01 (305)	5.16 (131)	4.21 (107)	2.83 (72)	3.78 (96)	5.39 (137)	2.36 (60)	6.85 (174)	9.21 (234)
CM 1-4	71	1.0	1"	1"	3/8"	0.39 (10)	5.59 (142)	6.22 (158)	4.92 (125)	7.52 (191)	2.95 (75)	6.50 (165)	12.72 (323)	5.87 (149)	4.92 (125)	3.54 (90)	3.78 (96)	5.39 (137)	2.36 (60)	6.85 (174)	9.21 (234)
CM 1-5	71	1.0	1"	1"	3/8"	0.39 (10)	5.59 (142)	6.22 (158)	4.92 (125)	7.52 (191)	2.95 (75)	6.50 (165)	13.43 (341)	6.57 (167)	5.63 (143)	4.25 (108)	3.78 (96)	5.39 (137)	2.36 (60)	6.85 (174)	9.21 (234)
CM 1-6*	71	1.0	1"	1"	3/8"	0.39 (10)	5.59 (142)	6.22 (158)	4.92 (125)	7.52 (191)	2.95 (75)	6.50 (165)	14.84 (377)	7.99 (203)	7.05 (179)	5.67 (144)	3.78 (96)	5.39 (137)	2.36 (60)	6.85 (174)	9.21 (234)
CM 1-7*	71	1.0	1"	1"	3/8"	0.39 (10)	5.59 (142)	6.22 (158)	4.92 (125)	7.52 (191)	2.95 (75)	6.50 (165)	14.84 (377)	7.99 (203)	7.05 (179)	5.67 (144)	3.78 (96)	5.39 (137)	2.36 (60)	6.85 (174)	9.21 (234)
CM 1-8*	80	1.4	1"	1"	3/8"	0.39 (10)	5.59 (142)	6.22 (158)	4.92 (125)	7.52 (191)	2.95 (75)	6.50 (165)	17.83 (453)	9.41 (239)	8.46 (215)	7.09 (180)	3.78 (96)	5.39 (137)	2.36 (60)	8.43 (214)	10.79 (274)
CM 1-9*	80	1.7	1"	1"	3/8"	0.39 (10)	5.59 (142)	6.22 (158)	4.92 (125)	7.52 (191)	2.95 (75)	6.50 (165)	17.83 (453)	9.41 (239)	8.46 (215)	7.09 (180)	3.78 (96)	5.39 (137)	2.36 (60)	8.43 (214)	10.79 (274)

* Only CM-I and CM-G versions are available with this number of stages.

1 x 115/230 V, 60 Hz (supply voltage B)

Pump type	Frame size	P_2 [Hp]	NPT		Rp	Dimensions [inches (mm)]															
			A1	A2	A3	A4	B1	B2	B3	H	H1	H2	L1	L2	L3	L4	L5	L6	L7	L8	L9
CM 1-2	71	0.8	1"	1"	3/8"	0.39 (10)	5.59 (142)	6.22 (158)	4.92 (125)	8.19 (208)	2.95 (75)	6.50 (165)	12.01 (305)	5.16 (131)	4.21 (107)	2.83 (72)	3.78 (96)	5.39 (137)	2.36 (60)	6.85 (174)	9.21 (234)
CM 1-3	71	0.8	1"	1"	3/8"	0.39 (10)	5.59 (142)	6.22 (158)	4.92 (125)	8.19 (208)	2.95 (75)	6.50 (165)	12.01 (305)	5.16 (131)	4.21 (107)	2.83 (72)	3.78 (96)	5.39 (137)	2.36 (60)	6.85 (174)	9.21 (234)
CM 1-4	71	0.8	1"	1"	3/8"	0.39 (10)	5.59 (142)	6.22 (158)	4.92 (125)	8.19 (208)	2.95 (75)	6.50 (165)	12.72 (323)	5.87 (149)	4.92 (125)	3.54 (90)	3.78 (96)	5.39 (137)	2.36 (60)	6.85 (174)	9.21 (234)
CM 1-5	71	0.8	1"	1"	3/8"	0.39 (10)	5.59 (142)	6.22 (158)	4.92 (125)	8.19 (208)	2.95 (75)	6.50 (165)	13.43 (341)	6.57 (167)	5.63 (143)	4.25 (108)	3.78 (96)	5.39 (137)	2.36 (60)	6.85 (174)	9.21 (234)
CM 1-6*	80	1.06	1"	1"	3/8"	0.39 (10)	5.59 (142)	6.22 (158)	4.92 (125)	8.19 (208)	2.95 (75)	6.50 (165)	16.42 (417)	7.99 (203)	7.05 (179)	5.67 (144)	3.78 (96)	5.39 (137)	2.36 (60)	8.43 (214)	10.79 (274)
CM 1-7*	80	1.5	1"	1"	3/8"	0.39 (10)	8.07 (205)	6.22 (158)	4.92 (125)	8.19 (208)	2.95 (75)	6.50 (165)	16.42 (417)	7.99 (203)	7.05 (179)	5.67 (144)	3.78 (96)	5.39 (137)	2.36 (60)	8.43 (214)	10.79 (274)
CM 1-8*	80	1.5	1"	1"	3/8"	0.39 (10)	8.07 (205)	6.22 (158)	4.92 (125)	8.19 (208)	2.95 (75)	6.50 (165)	17.83 (453)	9.41 (239)	8.46 (215)	7.09 (180)	3.78 (96)	5.39 (137)	2.36 (60)	8.43 (214)	10.79 (274)
CM 1-9*	80	1.5	1"	1"	3/8"	0.39 (10)	8.07 (205)	6.22 (158)	4.92 (125)	8.19 (208)	2.95 (75)	6.50 (165)	17.83 (453)	9.41 (239)	8.46 (215)	7.09 (180)	3.78 (96)	5.39 (137)	2.36 (60)	8.43 (214)	10.79 (274)

* Only CM-I and CM-G versions are available with this number of stages.

CM 3-A

(A = cast iron, EN-GJL-200)

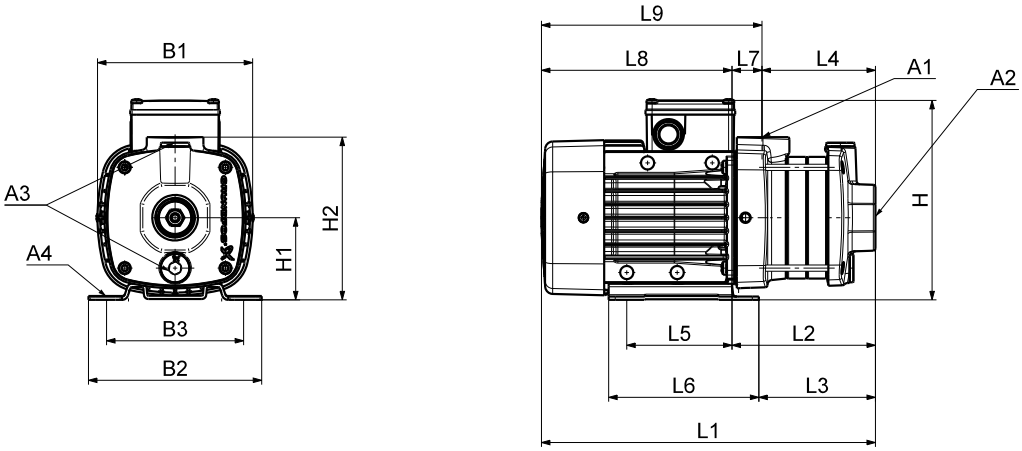

TM04 2248 2208

Dimensions

3 x 208-230 V / 440-480 V, 60 Hz (supply voltage E)

3 x 575 V, 60 Hz (supply voltage H)

Pump type	Frame size	P_2 [Hp]	NPT		Rp	Dimensions [inches (mm)]																
			A1	A2	A3	A4	B1	B2	B3	H	H1	H2	L1	L2	L3	L4	L5	L6	L7	L8	L9
CM 3-2	71	0.58	1"	1"	3/8"	0.39 (10)	5.59 (142)	6.22 (158)	4.92 (125)	7.52 (191)	2.95 (75)	5.87 (149)	11.34 (288)	4.49 (114)	3.50 (89)	3.39 (86)	3.78 (96)	5.39 (137)	1.10 (28)	6.85 (174)	7.95 (202)
CM 3-3	71	1.0	1"	1"	3/8"	0.39 (10)	5.59 (142)	6.22 (158)	4.92 (125)	7.52 (191)	2.95 (75)	5.87 (149)	12.05 (306)	5.20 (132)	4.21 (107)	4.09 (104)	3.78 (96)	5.39 (137)	1.10 (28)	6.85 (174)	7.95 (202)
CM 3-4	71	1.0	1"	1"	3/8"	0.39 (10)	5.59 (142)	6.22 (158)	4.92 (125)	7.52 (191)	2.95 (75)	5.87 (149)	12.76 (324)	5.91 (150)	4.92 (125)	4.80 (122)	3.78 (96)	5.39 (137)	1.10 (28)	6.85 (174)	7.95 (202)
CM 3-5	80	1.4	1"	1"	3/8"	0.39 (10)	5.59 (142)	6.22 (158)	4.92 (125)	7.52 (191)	2.95 (75)	5.87 (149)	15.04 (382)	6.61 (168)	5.63 (143)	5.51 (140)	3.78 (96)	5.39 (137)	1.10 (28)	8.43 (214)	9.53 (242)

1 x 115/230 V, 60 Hz (supply voltage B)

Pump type	Frame size	P_2 [Hp]	NPT		Rp	Dimensions [inches (mm)]																
			A1	A2	A3	A4	B1	B2	B3	H	H1	H2	L1	L2	L3	L4	L5	L6	L7	L8	L9
CM 3-2	71	0.8	1"	1"	3/8"	0.39 (10)	5.59 (142)	6.22 (158)	4.92 (125)	8.19 (208)	2.95 (75)	5.87 (149)	11.34 (288)	4.49 (114)	3.50 (89)	3.39 (86)	3.78 (96)	5.39 (137)	1.10 (28)	6.85 (174)	7.95 (202)
CM 3-3	71	0.8	1"	1"	3/8"	0.39 (10)	5.59 (142)	6.22 (158)	4.92 (125)	8.19 (208)	2.95 (75)	5.87 (149)	12.05 (306)	5.20 (132)	4.21 (107)	4.09 (104)	3.78 (96)	5.39 (137)	1.10 (28)	6.85 (174)	7.95 (202)
CM 3-4	80	1.06	1"	1"	3/8"	0.39 (10)	5.59 (142)	6.22 (158)	4.92 (125)	8.19 (208)	2.95 (75)	5.87 (149)	14.33 (364)	5.91 (150)	4.92 (125)	4.80 (122)	3.78 (96)	5.39 (137)	1.10 (28)	8.43 (214)	9.53 (242)
CM 3-5	80	1.5	1"	1"	3/8"	0.39 (10)	8.07 (205)	6.22 (158)	4.92 (125)	8.19 (208)	2.95 (75)	5.87 (149)	15.04 (382)	6.61 (168)	5.63 (143)	5.51 (140)	3.78 (96)	5.39 (137)	1.10 (28)	8.43 (214)	9.53 (242)

CM 3-I and CM 3-G

(I = AISI 304 / EN 1.4301 and G = AISI 316 / EN 1.4401)

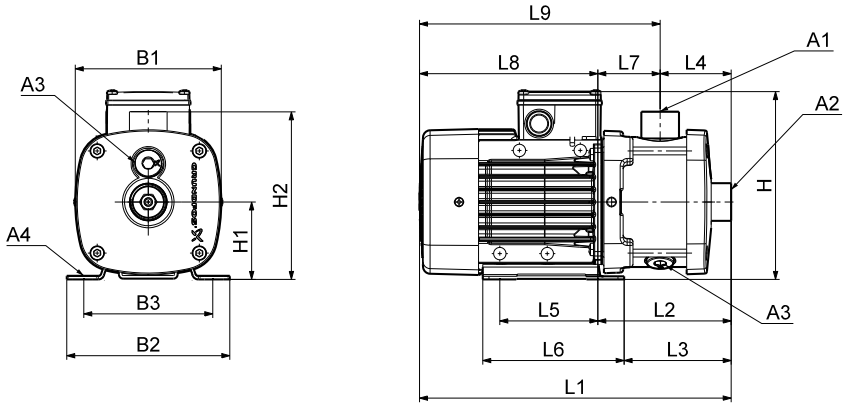

TM04 2246 2208

Dimensions

3 x 208-230 V / 440-480 V, 60 Hz (supply voltage E)

3 x 575 V, 60 Hz (supply voltage H)

Pump type	Frame size	P_2 [Hp]	NPT		Rp	Dimensions [inches (mm)]																
			A1	A2	A3	A4	B1	B2	B3	H	H1	H2	L1	L2	L3	L4	L5	L6	L7	L8	L9
CM 3-2	71	0.58	1"	1"	3/8"	0.39 (10)	5.59 (142)	6.22 (158)	4.92 (125)	7.52 (191)	2.95 (75)	6.50 (165)	12.00 (305)	5.16 (131)	4.21 (107)	2.83 (72)	3.78 (96)	5.39 (137)	2.36 (60)	6.85 (174)	9.21 (234)
CM 3-3	71	1.0	1"	1"	3/8"	0.39 (10)	5.59 (142)	6.22 (158)	4.92 (125)	7.52 (191)	2.95 (75)	6.50 (165)	12.00 (305)	5.16 (131)	4.21 (107)	2.83 (72)	3.78 (96)	5.39 (137)	2.36 (60)	6.85 (174)	9.21 (234)
CM 3-4	71	1.0	1"	1"	3/8"	0.39 (10)	5.59 (142)	6.22 (158)	4.92 (125)	7.52 (191)	2.95 (75)	6.50 (165)	12.72 (323)	5.87 (149)	4.92 (125)	3.54 (90)	3.78 (96)	5.39 (137)	2.36 (60)	6.85 (174)	9.21 (234)
CM 3-5	80	1.4	1"	1"	3/8"	0.39 (10)	5.59 (142)	6.22 (158)	4.92 (125)	7.52 (191)	2.95 (75)	6.50 (165)	15.0 (381)	6.57 (167)	5.63 (143)	4.25 (108)	3.78 (96)	5.39 (137)	2.36 (60)	8.43 (214)	10.79 (274)
CM 3-6*	80	1.7	1"	1"	3/8"	0.39 (10)	5.59 (142)	6.22 (158)	4.92 (125)	7.52 (191)	2.95 (75)	6.50 (165)	16.42 (417)	7.99 (203)	7.05 (179)	5.67 (144)	3.78 (96)	5.39 (137)	2.36 (60)	8.43 (214)	10.79 (274)
CM 3-7*	90	2.3	1"	1"	3/8"	0.39 (10)	7.00 (178)	7.00 (178)	5.51 (140)	7.87 (200)	3.54 (90)	7.09 (180)	18.39 (467)	9.57 (243)	8.98 (228)	5.67 (144)	4.92 (125)	6.10 (155)	3.90 (99)	8.82 (224)	12.72 (323)
CM 3-8*	90	3.4	1"	1"	3/8"	0.39 (10)	7.00 (178)	7.00 (178)	5.51 (140)	7.87 (200)	3.54 (90)	7.09 (180)	19.80 (503)	10.98 (279)	10.39 (264)	7.09 (180)	4.92 (125)	6.10 (155)	3.90 (99)	8.82 (224)	12.72 (323)
CM 3-9*	90	3.4	1"	1"	3/8"	0.39 (10)	7.00 (178)	7.00 (178)	5.51 (140)	7.87 (200)	3.54 (90)	7.09 (180)	19.80 (503)	10.98 (279)	10.39 (264)	7.09 (180)	4.92 (125)	6.10 (155)	3.90 (99)	8.82 (224)	12.72 (323)

* Only CM-I and CM-G versions are available with this number of stages.

1 x 115/230 V, 60 Hz (supply voltage B)

Pump type	Frame size	P_2 [Hp]	NPT		Rp	Dimensions [inches (mm)]																
			A1	A2	A3	A4	B1	B2	B3	H	H1	H2	L1	L2	L3	L4	L5	L6	L7	L8	L9
CM 3-2	71	0.6	1"	1"	3/8"	0.39 (10)	5.59 (142)	6.22 (158)	4.92 (125)	8.19 (208)	2.95 (75)	6.50 (165)	12.00 (305)	5.16 (131)	4.21 (107)	2.83 (72)	3.78 (96)	5.39 (137)	2.36 (60)	6.85 (174)	9.21 (234)
CM 3-3	71	0.6	1"	1"	3/8"	0.39 (10)	5.59 (142)	6.22 (158)	4.92 (125)	8.19 (208)	2.95 (75)	6.50 (165)	12.00 (305)	5.16 (131)	4.21 (107)	2.83 (72)	3.78 (96)	5.39 (137)	2.36 (60)	6.85 (174)	9.21 (234)
CM 3-4	80	1.06	1"	1"	3/8"	0.39 (10)	5.59 (142)	6.22 (158)	4.92 (125)	8.19 (208)	2.95 (75)	6.50 (165)	14.29 (363)	5.87 (149)	4.92 (125)	3.54 (90)	3.78 (96)	5.39 (137)	2.36 (60)	8.43 (214)	10.79 (274)
CM 3-5	80	1.5	1"	1"	3/8"	0.39 (10)	8.07 (205)	6.22 (158)	4.92 (125)	8.19 (208)	2.95 (75)	6.50 (165)	15.0 (381)	6.57 (167)	5.63 (143)	4.25 (108)	3.78 (96)	5.39 (137)	2.36 (60)	8.43 (214)	10.79 (274)
CM 3-6*	90	2.03	1"	1"	3/8"	0.39 (10)	7.01 (178)	7.01 (178)	5.51 (140)	9.02 (229)	3.54 (90)	7.09 (180)	18.39 (467)	9.57 (243)	8.98 (228)	5.67 (144)	4.92 (125)	6.10 (155)	3.90 (99)	8.82 (224)	12.72 (323)
CM 3-7*	90	2.03	1"	1"	3/8"	0.39 (10)	7.01 (178)	7.01 (178)	5.51 (140)	9.02 (229)	3.54 (90)	7.09 (180)	18.39 (467)	9.57 (243)	8.98 (228)	5.67 (144)	4.92 (125)	6.10 (155)	3.90 (99)	8.82 (224)	12.72 (323)
CM 3-8*	90	2.03	1"	1"	3/8"	0.39 (10)	7.01 (178)	7.01 (178)	5.51 (140)	9.02 (229)	3.54 (90)	7.09 (180)	19.80 (503)	10.98 (279)	10.39 (264)	7.09 (180)	4.92 (125)	6.10 (155)	3.90 (99)	8.82 (224)	12.72 (323)

* Only CM-I and CM-G versions are available with this number of stages.

CM 5-A

(A = cast iron, A48 CL30 / EN-GJL-200)

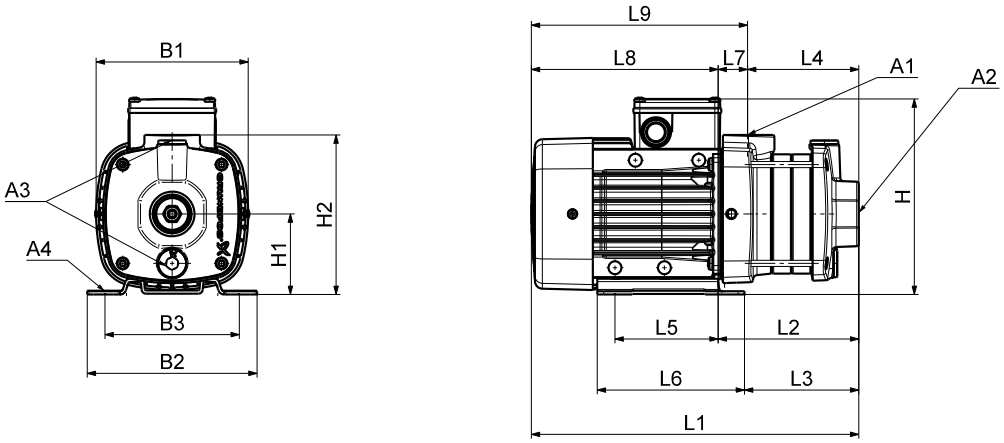

TM04 2248 2208

Dimensions

3 x 208-230 V / 440-480 V, 60 Hz (supply voltage E)

3 x 575 V, 60 Hz (supply voltage H)

Pump type	Frame size	P_2 [Hp]	NPT		Rp	Dimensions [inches (mm)]																
			A1	A2	A3	A4	B1	B2	B3	H	H1	H2	L1	L2	L3	L4	L5	L6	L7	L8	L9
CM 5-2	71	1.0	1"	1 1/4"	3/8"	0.39 (10)	5.59 (142)	6.22 (158)	4.92 (125)	7.52 (191)	2.95 (75)	5.87 (149)	11.34 (288)	4.89 (114)	3.50 (89)	3.39 (86)	3.78 (96)	5.39 (137)	1.10 (28)	6.85 (174)	7.95 (202)
CM 5-3	80	1.4	1"	1 1/4"	3/8"	0.39 (10)	5.59 (142)	6.22 (158)	4.92 (125)	7.52 (191)	2.95 (75)	5.87 (149)	13.62 (346)	5.20 (132)	4.21 (107)	4.09 (104)	3.78 (96)	5.39 (137)	1.10 (28)	8.43 (214)	9.53 (242)
CM 5-4	90	2.3	1"	1 1/4"	3/8"	0.39 (10)	7.00 (178)	7.00 (178)	5.51 (140)	7.87 (200)	3.54 (90)	7.91 (201)	16.34 (415)	7.52 (191)	6.93 (176)	9.94 (109)	4.92 (125)	6.10 (155)	3.23 (82)	8.82 (224)	12.05 (306)
CM 5-5	90	3.4	1"	1 1/4"	3/8"	0.39 (10)	7.00 (178)	7.00 (178)	5.51 (140)	7.87 (200)	3.54 (90)	7.91 (201)	17.05 (433)	8.23 (209)	7.64 (194)	5.00 (127)	4.92 (125)	6.10 (155)	3.23 (82)	8.82 (224)	12.05 (306)

1 x 115/230 V, 60 Hz (supply voltage B)

Pump type	Frame size	P_2 [Hp]	NPT		Rp	Dimensions [inches (mm)]																
			A1	A2	A3	A4	B1	B2	B3	H	H1	H2	L1	L2	L3	L4	L5	L6	L7	L8	L9
CM 5-2	80	1.06	1"	1 1/4"	3/8"	0.39 (10)	5.59 (142)	6.22 (158)	4.92 (125)	8.19 (208)	2.95 (75)	5.87 (149)	12.91 (328)	4.89 (114)	3.50 (89)	3.39 (86)	3.78 (96)	5.39 (137)	1.10 (28)	8.43 (214)	9.53 (242)
CM 5-3	80	1.5	1"	1 1/4"	3/8"	0.39 (10)	8.07 (205)	6.22 (158)	4.92 (125)	8.19 (208)	2.95 (75)	5.87 (149)	13.62 (346)	5.20 (132)	4.21 (107)	4.09 (104)	3.78 (96)	5.39 (137)	1.10 (28)	8.43 (214)	9.53 (242)
CM 5-4	90	2.03	1"	1 1/4"	3/8"	0.39 (10)	7.00 (178)	7.00 (178)	5.51 (140)	8.19 (208)	3.54 (90)	7.91 (201)	16.34 (415)	7.52 (191)	6.93 (176)	9.94 (109)	4.92 (125)	6.10 (155)	3.23 (82)	8.82 (224)	12.05 (306)
CM 5-5	90	2.03	1"	1 1/4"	3/8"	0.39 (10)	7.00 (178)	7.00 (178)	5.51 (140)	8.19 (208)	3.54 (90)	7.91 (201)	17.05 (433)	8.23 (209)	7.64 (194)	5.00 (127)	4.92 (125)	6.10 (155)	3.23 (82)	8.82 (224)	12.05 (306)

CM 5-I and CM 5-G

(I = AISI 304 / EN 1.4301 and AISI 316 / G = EN 1.4401)

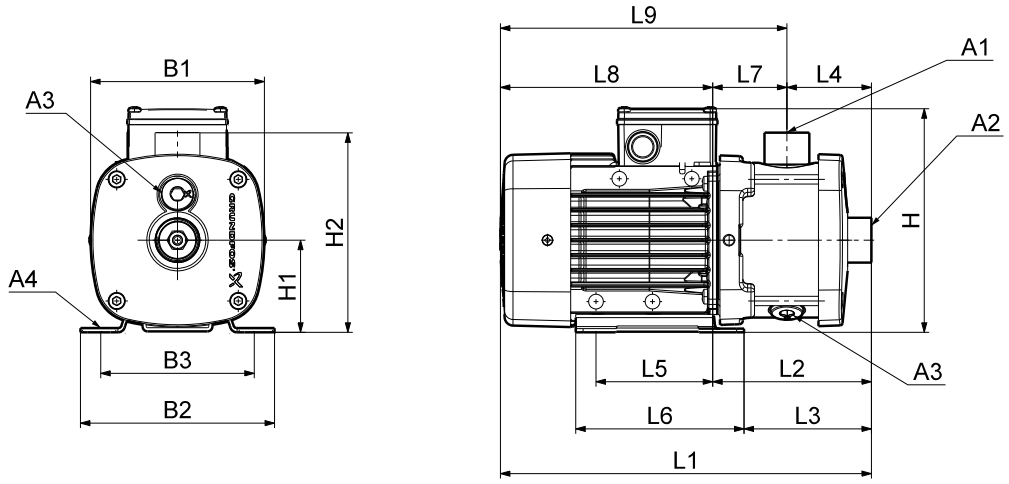

Dimensions

3 x 208-230 V / 440-480 V, 60 Hz (supply voltage E)

3 x 575 V, 60 Hz (supply voltage H)

Pump type	Frame size	P_2 [Hp]	NPT		Rp	Dimensions [inches (mm)]																
			A1	A2	A3	A4	B1	B2	B3	H	H1	H2	L1	L2	L3	L4	L5	L6	L7	L8	L9
CM 5-2	71	1.0	1"	1 1/4"	3/8"	0.39 (10)	5.59 (142)	6.22 (158)	4.92 (125)	7.52 (191)	2.95 (75)	6.50 (165)	12.00 (305)	5.16 (131)	4.22 (107)	2.84 (72)	3.78 (96)	5.39 (137)	2.36 (60)	6.85 (174)	9.21 (234)
CM 5-3	80	1.4	1"	1 1/4"	3/8"	0.39 (10)	5.59 (142)	6.22 (158)	4.92 (125)	7.52 (191)	2.95 (75)	6.50 (165)	13.58 (345)	5.16 (131)	4.22 (107)	2.84 (72)	3.78 (96)	5.39 (137)	2.36 (60)	8.43 (214)	10.79 (274)
CM 5-4	90	2.3	1"	1 1/4"	3/8"	0.39 (10)	7.00 (178)	7.00 (178)	5.51 (140)	7.87 (200)	3.54 (90)	7.09 (180)	16.26 (413)	7.44 (189)	6.85 (174)	3.54 (90)	4.92 (125)	6.10 (155)	3.90 (99)	8.82 (224)	12.72 (323)
CM 5-5	90	3.4	1"	1 1/4"	3/8"	0.39 (10)	7.00 (178)	7.00 (178)	5.51 (140)	7.87 (200)	3.54 (90)	7.09 (180)	16.97 (431)	8.15 (207)	7.56 (192)	4.25 (108)	4.92 (125)	6.10 (155)	3.90 (99)	8.82 (224)	12.72 (323)
CM 5-6*	90	3.4	1"	1 1/4"	3/8"	0.39 (10)	7.00 (178)	7.00 (178)	5.51 (140)	7.87 (200)	3.54 (90)	7.09 (180)	18.39 (467)	9.57 (243)	8.98 (228)	5.67 (144)	4.92 (125)	6.10 (155)	3.90 (99)	8.82 (224)	12.72 (323)
CM 5-7*	90	3.4	1"	1 1/4"	3/8"	0.39 (10)	7.00 (178)	7.00 (178)	5.51 (140)	7.87 (200)	3.54 (90)	7.09 (180)	18.39 (467)	9.57 (243)	8.98 (228)	5.67 (144)	4.92 (125)	6.10 (155)	3.90 (99)	8.82 (224)	12.72 (323)
CM 5-8*	100	5.4	1"	1 1/4"	3/8"	0.39 (10)	7.80 (198)	7.83 (199)	6.30 (160)	8.66 (220)	3.94 (100)	7.48 (190)	22.09 (561)	11.38 (289)	10.79 (274)	7.09 (180)	5.51 (140)	6.69 (170)	4.29 (109)	10.71 (272)	15 (381)

* Only CM-G versions are available with this number of stages.

1 x 115/230 V, 60 Hz (supply voltage B)

1 x 220 V, 60 Hz (supply voltage A)

Pump type	Frame size	P_2 [Hp]	NPT		Rp	Dimensions [inches (mm)]																
			A1	A2	A3	A4	B1	B2	B3	H	H1	H2	L1	L2	L3	L4	L5	L6	L7	L8	L9
CM 5-2	80	1.06	1"	1 1/4"	3/8"	0.39 (10)	5.59 (142)	6.22 (158)	4.92 (125)	4.25 (208)	2.95 (75)	6.50 (165)	13.58 (345)	5.16 (131)	4.22 (107)	2.84 (72)	3.78 (96)	5.39 (137)	2.36 (60)	8.43 (214)	10.79 (274)
CM 5-3	80	1.5	1"	1 1/4"	3/8"	0.39 (10)	205	6.22 (158)	4.92 (125)	4.25 (208)	2.95 (75)	6.50 (165)	13.58 (345)	5.16 (131)	4.22 (107)	2.84 (72)	3.78 (96)	5.39 (137)	2.36 (60)	8.43 (214)	10.79 (274)
CM 5-4	90	2.03	1"	1 1/4"	3/8"	0.39 (10)	7.00 (178)	7.00 (178)	5.51 (140)	9.02 (229)	3.54 (90)	7.09 (180)	16.26 (413)	7.4 (189)	6.85 (174)	3.54 (90)	4.92 (125)	6.10 (155)	3.90 (99)	8.82 (224)	12.72 (323)
CM 5-5	90	2.03	1"	1 1/4"	3/8"	0.39 (10)	7.00 (178)	7.00 (178)	5.51 (140)	9.02 (229)	3.54 (90)	7.09 (180)	16.97 (431)	8.15 (207)	7.56 (192)	4.25 (108)	4.92 (125)	6.10 (155)	3.90 (99)	8.82 (224)	12.72 (323)

CM 10-A

(A = cast iron, A48 CL30 / EN-GJL-200)

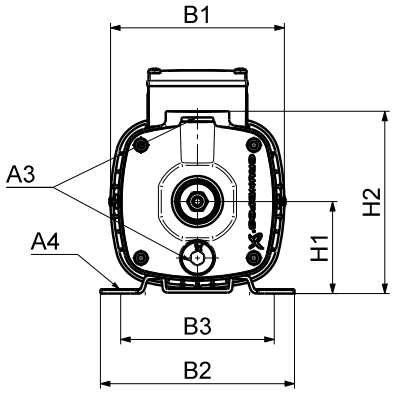

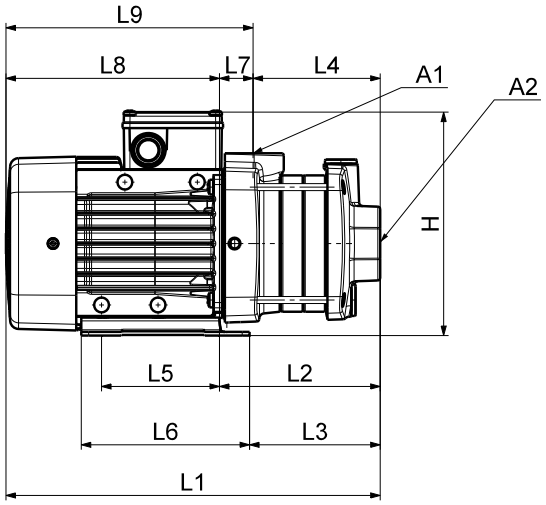

TM04 2248 2208

CM 10-A Dimensions

3 x 208-230 V / 440-480 V, 60 Hz (supply voltage E)

3 x 575 V, 60 Hz (supply voltage H)

Pump type	Frame size	P_2 [Hp]	NPT		Rp	Dimensions [inches (mm)]																
			A1	A2	A3	A4	B1	B2	B3	H	H1	H2	L1	L2	L3	L4	L5	L6	L7	L8	L9
CM 10-1	80	1.7	1 1/2"	1 1/2"	3/8"	0.39 (10)	7.48 (190)	6.22 (158)	7.92 (125)	8.50 (216)	3.94 (100)	9.65 (245)	14.53 (369)	6.10 (155)	5.16 (131)	3.82 (97)	3.78 (96)	5.39 (137)	2.28 (58)	8.43 (214)	10.71 (272)
CM 10-2*	90	3.4	1 1/2"	1 1/2"	3/8"	0.39 (10)	7.48 (190)	7.84 (199)	6.30 (160)	8.27 (210)	3.94 (100)	9.65 (245)	16.58 (421)	8.62 (219)	8.03 (204)	3.82 (97)	5.51 (140)	6.69 (170)	3.66 (93)	9.13 (232)	12.76 (324)
CM 10-3*	100	5.4	1 1/2"	1 1/2"	3/8"	0.39 (10)	7.80 (198)	7.84 (199)	6.30 (160)	8.66 (220)	3.94 (100)	9.65 (245)	16.96 (507)	9.25 (235)	8.66 (220)	5 (127)	5.51 (140)	6.69 (170)	4.25 (108)	10.71 (272)	14.96 (380)

* This pump type is not available with supply voltage O.

1 x 115/230 V, 60 Hz (supply voltage B)

Pump type	Frame size	P_2 [Hp]	NPT		Rp	Dimensions [inches (mm)]																
			A1	A2	A3	A4	B1	B2	B3	H	H1	H2	L1	L2	L3	L4	L5	L6	L7	L8	L9
CM 10-1	80	1.5	1 1/2"	1 1/2"	3/8"	0.39 (10)	8.07 (205)	6.22 (158)	4.92 (125)	9.17 (233)	3.94 (100)	9.65 (245)	14.53 (369)	6.10 (155)	5.16 (131)	3.82 (97)	3.78 (96)	5.39 (137)	2.28 (58)	8.43 (214)	10.71 (272)

CM 10-I and CM 10-G

(I = AISI 304 / EN 1.4301 and G = AISI 316 / EN 1.4401)

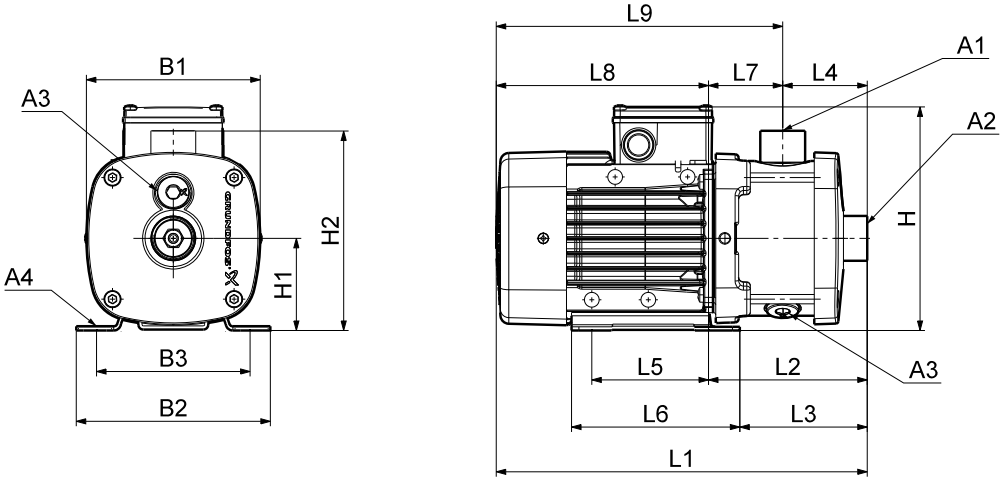

Dimensions

3 x 208-230 V / 440-480 V, 60 Hz (supply voltage E)

3 x 575 V, 60 Hz (supply voltage H)

Pump type	Frame size	P_2 [Hp]	NPT		Rp	Dimensions [inches (mm)]															
			A1	A2	A3	A4	B1	B2	B3	H	H1	H2	L1	L2	L3	L4	L5	L6	L7	L8	L9
CM 10-1	80	1.7	1 1/2"	1 1/2"	3/8"	0.39 (10)	7.09 (180)	6.22 (158)	4.92 (125)	8.50 (216)	3.94 (100)	8.58 (218)	15.71 (399)	7.28 (185)	6.34 (161)	4.13 (105)	3.78 (96)	5.39 (137)	4.15 (80)	8.43 (214)	11.57 (294)
CM 10-2*	90	3.4	1 1/2"	1 1/2"	3/8"	0.39 (10)	7.09 (180)	7.84 (199)	6.30 (160)	8.27 (210)	3.94 (100)	8.58 (218)	17.72 (450)	7.05 (179)	6.46 (164)	4.13 (105)	5.51 (140)	6.69 (170)	2.91 (74)	10.71 (272)	13.58 (345)
CM 10-3*	100	5.4	1 1/2"	1 1/2"	3/8"	0.39 (10)	7.80 (198)	7.84 (199)	6.30 (160)	8.66 (220)	3.94 (100)	8.58 (218)	19.96 (507)	9.25 (235)	8.66 (220)	4.13 (105)	5.51 (140)	6.69 (170)	5.12 (130)	10.71 (272)	15.83 (402)
CM 10-4*	112	8.0	1 1/2"	1 1/2"	3/8"	0.47 (12)	8.66 (220)	8.98 (228)	7.48 (190)	9.69 (246)	4.41 (112)	9.06 (230)	23.19 (589)	11.30 (287)	10.67 (271)	5.32 (135)	5.51 (140)	6.77 (172)	5.98 (152)	11.89 (302)	17.87 (454)
CM 10-5*	112	8.0	1 1/2"	1 1/2"	3/8"	0.47 (12)	8.66 (220)	8.98 (228)	7.48 (190)	9.69 (246)	4.41 (112)	9.06 (230)	25.55 (649)	13.66 (347)	13.03 (331)	7.68 (195)	5.51 (140)	6.77 (172)	5.98 (152)	11.89 (302)	17.87 (454)

* This pump type is not available with supply voltage O.

1 x 115/230 V, 60 Hz (supply voltage B)

Pump type	Frame size	P_2 [Hp]	NPT		Rp	Dimensions [inches (mm)]															
			A1	A2	A3	A4	B1	B2	B3	H	H1	H2	L1	L2	L3	L4	L5	L6	L7	L8	L9
CM 10-1	80	1.5	1 1/2"	1 1/2"	3/8"	0.39 (10)	8.07 (205)	6.22 (158)	4.92 (125)	9.17 (233)	3.94 (100)	8.58 (218)	15.71 (399)	7.28 (185)	6.34 (161)	4.13 (105)	3.78 (96)	5.39 (137)	4.15 (80)	8.43 (214)	11.57 (294)

CM 15-A

(A = cast iron, A48 CL30 / EN-GJL-200)

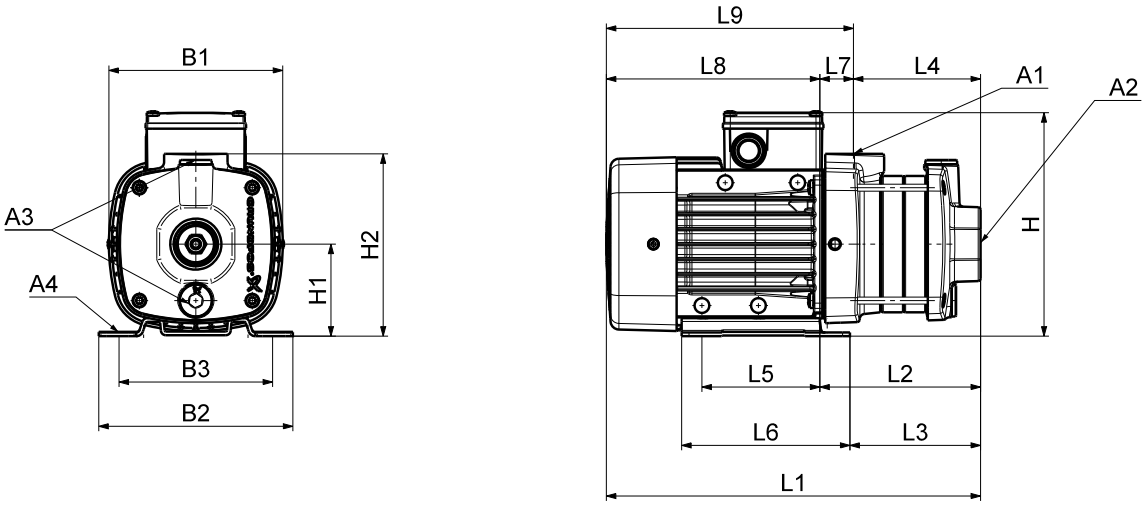

Dimensions

3 x 208-230 V / 440-480 V, 60 Hz (supply voltage E)

3 x 575 V, 60 Hz (supply voltage H)

Pump type	Frame size	P_2 [Hp]	NPT		Rp	Dimensions [inches (mm)]															
			A1	A2	A3	A4	B1	B2	B3	H	H1	H2	L1	L2	L3	L4	L5	L6	L7	L8	L9
CM 15-1	90	3.4	2"	2"	3/8"	0.39 (10)	7.48 (190)	7.84 (199)	6.30 (160)	8.23 (210)	3.94 (100)	9.65 (245)	16.57 (421)	7.48 (190)	6.89 (175)	3.82 (97)	5.52 (140)	6.69 (170)	3.66 (93)	9.13 (232)	12.76 (324)
CM 15-2	100	5.4	2"	2"	3/8"	0.39 (10)	7.80 (198)	7.84 (199)	6.30 (160)	8.66 (220)	3.94 (100)	9.65 (245)	18.78 (477)	8.07 (205)	7.48 (190)	3.82 (97)	5.52 (140)	6.69 (170)	4.25 (108)	10.71 (272)	14.96 (380)
CM 15-3	112	8.0	2"	2"	3/8"	0.47 (12)	8.66 (220)	8.98 (228)	7.48 (190)	9.69 (246)	4.91 (112	10.19 (257)	22.05 (560)	10.16 (258)	9.53 (242)	5.00 (127)	5.52 (140)	6.77 (72)	5.16 (131)	11.89 (302)	17.05 (433)

CM 15-I and CM 15-G

(I = AISI 304 / EN 1.4301 and G = AISI 316 / EN 1.4401)

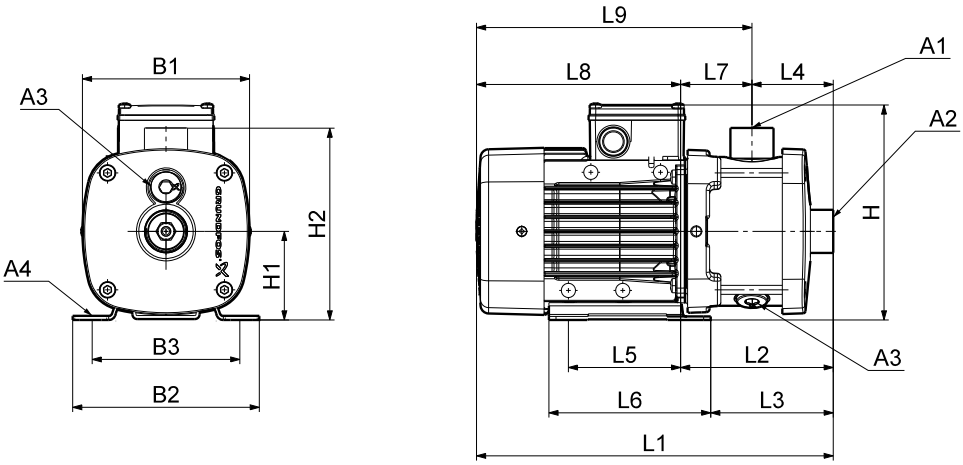

Dimensions

3 x 208-230 V / 440-480 V, 60 Hz (supply voltage E)

3 x 575 V, 60 Hz (supply voltage H)

Pump type	Frame size	P_2 [Hp]	NPT		Rp	Dimensions [inches (mm)]															
			A1	A2	A3	A4	B1	B2	B3	H	H1	H2	L1	L2	L3	L4	L5	L6	L7	L8	L9
CM 15-1	90	3.4	2"	2"	3/8"	0.39 (10)	7.09 (180)	7.84 (199)	6.30 (160)	8.23 (210)	3.94 (100)	8.58 (218)	17.72 (450)	8.62 (219)	8.03 (204)	4.13 (105)	5.52 (140)	6.69 (170)	4.49 (114)	9.13 (232)	13.58 (345)
CM 15-2	100	5.4	2"	2"	3/8"	0.39 (10)	7.80 (198)	7.84 (199)	6.30 (160)	8.66 (220)	3.94 (100)	8.58 (218)	19.96 (507)	9.25 (235)	8.66 (220)	4.13 (105)	5.52 (140)	6.69 (170)	5.12 (130)	10.71 (272)	15.83 (402)
CM 15-3	112	8.0	2"	2"	3/8"	0.47 (12)	8.66 (220)	8.98 (228)	7.48 (190)	9.69 (246)	4.91 (112)	9.06 (230)	22.01 (559)	10.12 (257)	9.49 (241)	4.13 (105)	5.52 (140)	6.77 (172)	5.98 (152)	11.89 (302)	17.87 (454)

CM 25-A

(A = cast iron, A48-CL30 / EN-GJL-200)

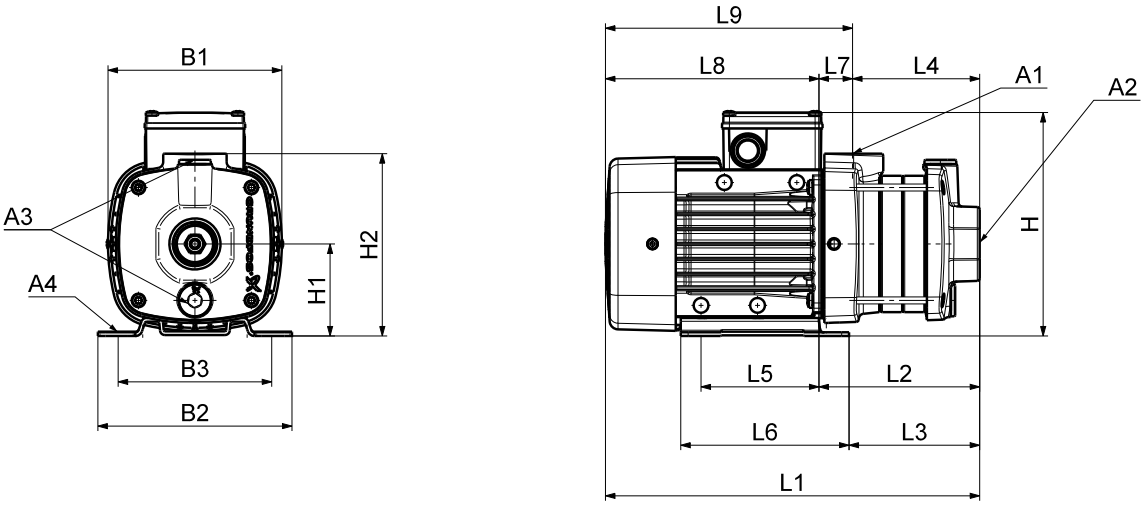

Dimensions

3 x 208-230 V / 440-480 V, 60 Hz (supply voltage E)

3 x 575 V, 60 Hz (supply voltage H)

Pump type	Frame size	P_2 [Hp]	NPT		Rp	Dimensions [inches (mm)]															
			A1	A2	A3	A4	B1	B2	B3	H	H1	H2	L1	L2	L3	L4	L5	L6	L7	L8	L9
CM 25-1	100	5.4	2"	2"	3/8"	0.39 (10)	7.80 (198)	7.84 (199)	6.30 (160)	8.66 (220)	3.94 (100)	9.65 (245)	18.78 (477)	8.07 (205)	7.48 (190)	3.82 (97)	5.52 (140)	6.69 (170)	4.25 (108)	10.71 (272)	14.96 (380)
CM 25-2	112	8.0	2"	2"	3/8"	0.47 (12)	8.66 (220)	8.98 (228)	7.48 (190)	9.69 (246)	4.91 (112)	10.12 (257)	20.87 (530)	8.98 (228)	8.35 (212)	3.82 (97)	5.52 (140)	6.77 (172)	5.16 (131)	11.89 (302)	17.05 (433)

CM 25-I and CM 25-G

(I = AISI 304 / EN 1.4301 and G = AISI 316 / EN 1.4401)

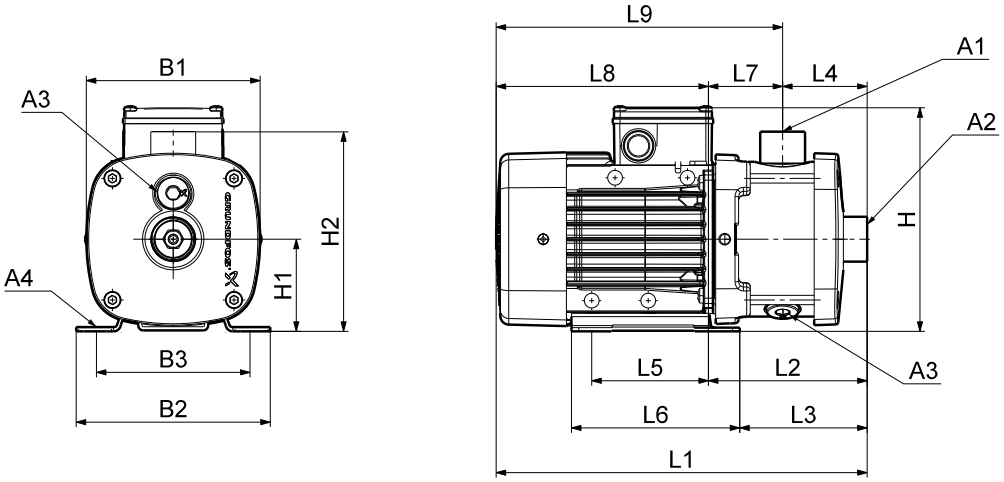

Dimensions

3 x 208-230 V / 440-480 V, 60 Hz (supply voltage E)

3 x 575 V, 60 Hz (supply voltage H)

Pump type	Frame size	P_2 [Hp]	NPT		Rp	Dimensions [inches (mm)]															
			A1	A2	A3	A4	B1	B2	B3	H	H1	H2	L1	L2	L3	L4	L5	L6	L7	L8	L9
CM 25-1	100	5.4	2"	2"	3/8"	0.39 (10)	7.80 (198)	7.84 (199)	6.30 (160)	8.66 (220)	3.94 (100)	8.58 (218)	19.96 (507)	9.25 (235)	8.66 (220)	4.13 (105)	5.52 (140)	6.69 (170)	5.12 (130)	10.71 (272)	15.83 (402)
CM 25-2	112	8.0	2"	2"	3/8"	0.47 (12)	8.66 (220)	8.98 (228)	7.48 (190)	1.81 (246)	4.91 (112)	9.06 (230)	22.01 (559)	10.12 (257)	9.49 (241)	4.13 (105)	5.52 (140)	6.77 (172)	5.98 (152)	11.89 (302)	17.87 (454)

CME 1-A

(A = cast iron, A48 CL30 / EN-GJL-200)

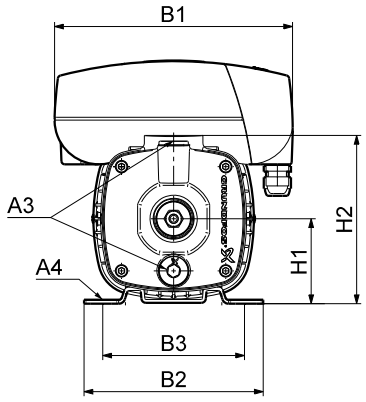

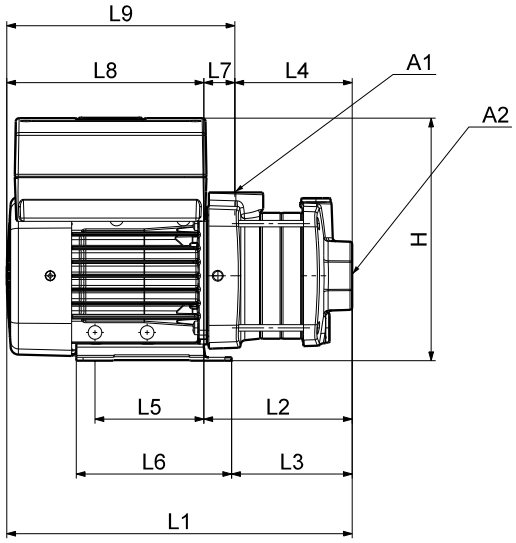

TM04 2249 2208

Dimensions

1 x 200-240 V, 60 Hz (supply voltage U)

Pump type	Frame size	Hp	NPT		Rp	Dimensions [inches (mm)]															
			A1	A2	A3	A4	B1	B2	B3	H	H1	H2	L1	L2	L3	L4	L5	L6	L7	L8	L9
CME 1-2	71A	0.75	1"	1"	3/8"	0.41 (10.5)	8.35 (212)	6.22 (158)	4.92 (125)	9.17 (233)	2.95 (75)	5.85 (148.5)	12.13 (308.2)	4.41 (111.9)	3.44 (87.4)	3.34 (84.8)	3.78 (96)	5.39 (137)	1.07 (27.1)	7.73 (196.3)	8.80 (223.4)
CME 1-3	71A	0.75	1"	1"	3/8"	0.41 (10.5)	8.35 (212)	6.22 (158)	4.92 (125)	9.17 (233)	2.95 (75)	5.85 (148.5)	12.84 (326.2)	5.11 (129.9)	4.15 (105.4)	4.05 (102.8)	3.78 (96)	5.39 (137)	1.07 (27.1)	7.73 (196.3)	8.80 (223.4)
CME 1-4	71A	0.75	1"	1"	3/8"	0.41 (10.5)	8.35 (212)	6.22 (158)	4.92 (125)	9.17 (233)	2.95 (75)	5.85 (148.5)	13.55 (344.2)	5.82 (147.9)	4.86 (123.4)	4.76 (120.8)	3.78 (96)	5.39 (137)	1.07 (27.1)	7.73 (196.3)	8.80 (223.4)
CME 1-5	80B	1.5	1"	1"	3/8"	0.41 (10.5)	8.35 (212)	6.22 (158)	4.92 (125)	9.17 (233)	2.95 (75)	5.85 (148.5)	14.26 (362.2)	6.53 (165.9)	5.57 (141.4)	5.46 (138.8)	3.78 (96)	5.39 (137)	1.07 (27.1)	7.73 (196.3)	8.80 (223.4)

CME 1-I and CME 1-G

(I = AISI 304 / EN 1.4301 and G = AISI 316 / EN 1.4401)

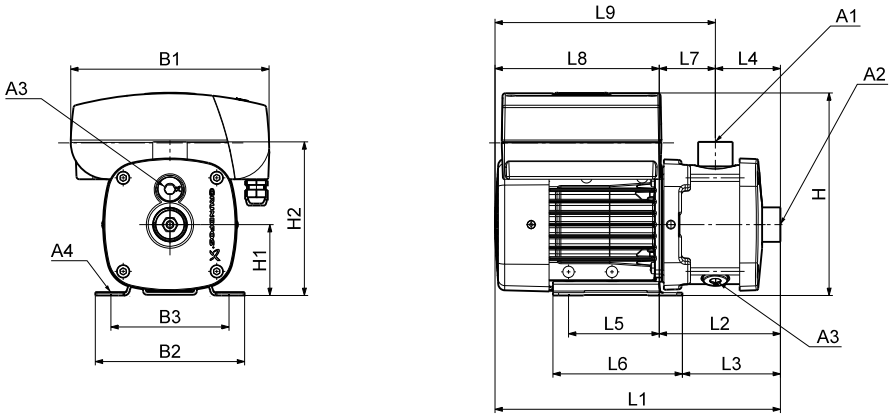

Dimensions

3 x 200-240 V, 60 Hz (supply voltage V)

Pump type	Frame size	Hp	NPT		Rp	Dimensions [inches (mm)]															
			A1	A2	A3	A4	B1	B2	B3	H	H1	H2	L1	L2	L3	L4	L5	L6	L7	L8	L9
CME 1-9	90C	2	1"	1"	3/8"	0.41 (10.5)	10.51 (267)	7.01 (178)	5.50 (139.8)	9.78 (248.3)	3.56 (90.3)	7.11 (180.6)	19.00 (482.5)	11.21 (284.7)	10.62 (269.7)	7.07 (179.6)	4.92 (125)	6.10 (155)	4.14 (105.1)	7.79 (197.8)	11.93 (302.9)

3 x 440-480 V, 60 Hz (supply voltage T)

Pump type	Frame size	Hp	NPT		Rp	Dimensions [inches (mm)]															
			A1	A2	A3	A4	B1	B2	B3	H	H1	H2	L1	L2	L3	L4	L5	L6	L7	L8	L9
CME 1-9	90C	2	1"	1"	3/8"	0.41 (10.5)	10.51 (267)	7.01 (178)	5.50 (139.8)	9.78 (248.3)	3.56 (90.3)	7.11 (180.6)	19.00 (482.5)	11.21 (284.7)	10.62 (269.7)	7.07 (179.6)	4.92 (125)	6.10 (155)	4.14 (105.1)	7.79 (197.8)	11.93 (302.9)

1 x 200-240 V, 60 Hz (supply voltage U)

Pump type	Frame size	Hp	NPT		Rp	Dimensions [inches (mm)]															
			A1	A2	A3	A4	B1	B2	B3	H	H1	H2	L1	L2	L3	L4	L5	L6	L7	L8	L9
CME 1-2	71A	0.75	1"	1"	3/8"	0.41 (10.5)	8.35 (212)	6.22 (158)	4.92 (125)	9.17 (233)	2.95 (75)	6.51 (165.3)	12.91 (328)	5.19 (131.7)	4.22 (107.2)	2.82 (71.6)	3.78 (96)	5.39 (137)	2.37 (60.1)	7.73 (196.3)	10.09 (256.4)
CME 1-3	71A	0.75	1"	1"	3/8"	0.41 (10.5)	8.35 (212)	6.22 (158)	4.92 (125)	9.17 (233)	2.95 (75)	6.51 (165.3)	12.91 (328)	5.19 (131.7)	4.22 (107.2)	2.82 (71.6)	3.78 (96)	5.39 (137)	2.37 (60.1)	7.73 (196.3)	10.09 (256.4)
CME 1-4	71A	0.75	1"	1"	3/8"	0.41 (10.5)	8.35 (212)	6.22 (158)	4.92 (125)	9.17 (233)	2.95 (75)	6.51 (165.3)	13.62 (346)	5.89 (149.7)	4.93 (125.2)	3.53 (89.6)	3.78 (96)	5.39 (137)	2.37 (60.1)	7.73 (196.3)	10.09 (256.4)
CME 1-5	80B	1.5	1"	1"	3/8"	0.41 (10.5)	8.35 (212)	6.22 (158)	4.92 (125)	9.17 (233)	2.95 (75)	6.51 (165.3)	14.33 (364)	6.60 (167.7)	5.64 (143.2)	4.24 (107.6)	3.78 (96)	5.39 (137)	2.37 (60.1)	7.73 (196.3)	10.09 (256.4)
CME 1-6	80B	1.5	1"	1"	3/8"	0.41 (10.5)	8.35 (212)	6.22 (158)	4.92 (125)	9.17 (233)	2.95 (75)	6.51 (165.3)	15.75 (400)	8.02 (203.7)	7.06 (179.2)	(5.65) (143.6)	3.78 (96)	5.39 (137)	2.37 (60.1)	7.73 (196.3)	10.09 (256.4)
CME 1-7	80B	1.5	1"	1"	3/8"	0.41 (10.5)	8.35 (212)	6.22 (158)	4.92 (125)	9.17 (233)	2.95 (75)	6.51 (165.3)	15.75 (400)	8.02 (203.7)	7.06 (179.2)	5.65 (143.6)	3.78 (96)	5.39 (137)	2.37 (60.1)	7.73 (196.3)	10.09 (256.4)
CME 1-8	80B	1.5	1"	1"	3/8"	0.41 (10.5)	8.35 (212)	6.22 (158)	4.92 (125)	9.17 (233)	2.95 (75)	6.51 (165.3)	17.17 (436)	9.44 (239.7)	8.47 (215.2)	7.07 (179.6)	3.78 (96)	5.39 (137)	2.37 (60.1)	7.73 (196.3)	10.09 (256.4)
CME 1-9	90C	2	1"	1"	3/8"	0.41 (10.5)	8.35 (212)	7.01 (178)	5.50 (139.8)	9.78 (248.3)	3.56 (90.3)	7.11 (180.6)	17.42 (442.5)	11.21 (284.7)	10.62 (269.7)	7.07 (179.6)	4.92 (125)	6.10 (155)	4.14 (105.1)	6.21 (157.8)	10.35 (262.9)

CME 3-A

(A = cast iron, A48 CL30 / EN-GJL-200)

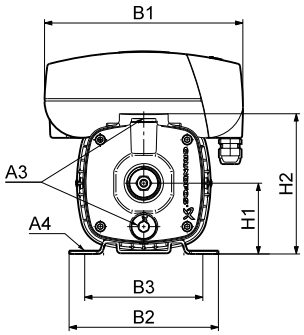

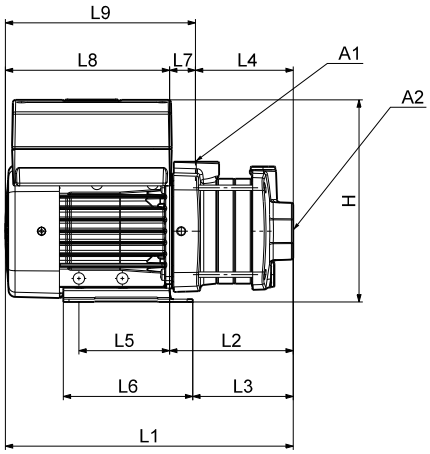

TM04 2249 2208

Dimensions

1 x 200-240 V, 60 Hz (supply voltage U)

Pump type	Frame size	Hp	NPT		Rp	Dimensions [inches (mm)]															
			A1	A2	A3	A4	B1	B2	B3	H	H1	H2	L1	L2	L3	L4	L5	L6	L7	L8	L9
CME 3-2	71A	0.75	1"	1"	3/8"	0.41 (10.5)	8.35 (212)	6.22 (158)	4.92 (125)	9.17 (233)	2.95 (75)	5.85 (148.5)	12.13 (308.2)	4.41 (111.9)	3.44 (87.4)	3.34 (84.8)	3.78 (96)	5.39 (137)	1.07 (27.1)	7.73 (196.3)	8.80 (223.4)
CME 3-3	80B	1.5	1"	1"	3/8"	0.41 (10.5)	8.35 (212)	6.22 (158)	4.92 (125)	9.17 (233)	2.95 (75)	5.85 (148.5)	12.84 (326.2)	5.11 (129.9)	4.15 (105.4)	4.05 (102.8)	3.78 (96)	5.39 (137)	1.07 (27.1)	7.73 (196.3)	8.80 (223.4)
CME 3-4	80B	1.5	1"	1"	3/8"	0.41 (10.5)	8.35 (212)	6.22 (158)	4.92 (125)	9.17 (233)	2.95 (75)	5.85 (148.5)	13.55 (344.2)	5.82 (147.9)	4.86 (123.4)	4.76 (120.8)	3.78 (96)	5.39 (137)	1.07 (27.1)	7.73 (196.3)	8.80 (223.4)
CME 3-5	80B	1.5	1"	1"	3/8"	0.41 (10.5)	8.35 (212)	6.22 (158)	4.92 (125)	9.17 (233)	2.95 (75)	5.85 (148.5)	14.26 (362.2)	6.53 (165.9)	5.57 (141.4)	5.46 (138.8)	3.78 (96)	5.39 (137)	1.07 (27.1)	7.73 (196.3)	8.80 (223.4)

CME 3-I and CME 3-G

(I = AISI 304 / EN 1.4301 and G = AISI 316 / EN 1.4401)

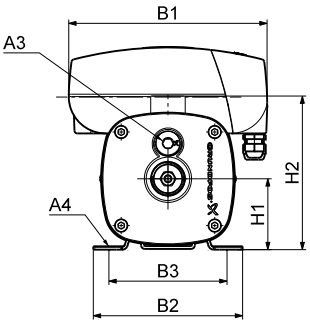

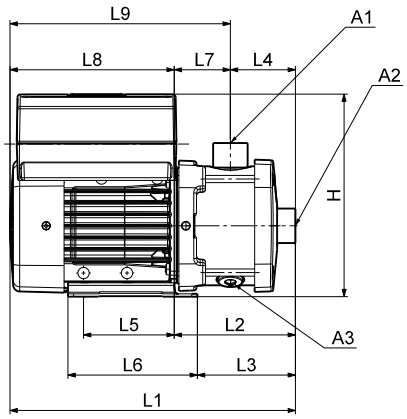

TM04 2247 2208

Dimensions

3 x 200-240 V, 60 Hz (supply voltage V)

Pump type	Frame size	Hp	NPT		Rp	Dimensions [inches (mm)]															
			A1	A2	A3	A4	B1	B2	B3	H	H1	H2	L1	L2	L3	L4	L5	L6	L7	L8	L9
CME 3-6	90C	2	1"	1"	3/8"	0.41 (10.5)	10.51 (267)	7.01 (178)	5.50 (139.8)	9.78 (248.3)	3.56 (90.3)	7.11 (180.6)	17.58 (446.5)	9.79 (248.7)	9.20 (233.7)	5.65 (143.6)	4.92 (125)	6.10 (155)	4.14 (105.1)	7.79 (197.8)	11.93 (302.9)
CME 3-7	90C	2	1"	1"	3/8"	0.41 (10.5)	10.51 (267)	7.01 (178)	5.50 (139.8)	9.78 (248.3)	3.56 (90.3)	7.11 (180.6)	17.58 (446.5)	9.79 (248.7)	9.20 (233.7)	5.65 (143.6)	4.92 (125)	6.10 (155)	4.14 (105.1)	7.79 (197.8)	11.93 (302.9)
CME 3-8	100A	3	1"	1"	3/8"	0.47 (12)	11.45 (290.8)	7.87 (200)	6.30 (160)	11.82 (300.3)	3.93 (99.8)	7.48 (190.1)	22.10 (561.4)	11.46 (291)	10.81 (274.5)	7.07 (179.6)	5.51 (140)	6.81 (173)	4.39 (111.4)	10.65 (270.4)	15.03 (381.8)
CME 3-9	100A	3	1"	1"	3/8"	0.47 (12)	11.45 (290.8)	7.87 (200)	6.30 (160)	11.82 (300.3)	3.93 (99.8)	7.48 (190.1)	22.10 (561.4)	11.46 (291)	10.81 (274.5)	7.07 (179.6)	5.51 (140)	6.81 (173)	4.39 (111.4)	10.65 (270.4)	15.03 (381.8)

3 x 440-480 V, 60 Hz (supply voltage T)

Pump type	Frame size	Hp	NPT		Rp	Dimensions [inches (mm)]															
			A1	A2	A3	A4	B1	B2	B3	H	H1	H2	L1	L2	L3	L4	L5	L6	L7	L8	L9
CME 3-6	90C	2	1"	1"	3/8"	0.41 (10.5)	10.51 (267)	7.01 (178)	5.50 (139.8)	9.78 (248.3)	3.56 (90.3)	7.11 (180.6)	17.58 (446.5)	9.79 (248.7)	9.20 (233.7)	5.65 (143.6)	4.92 (125)	6.10 (155)	4.14 (105.1)	7.79 (197.8)	11.93 (302.9)
CME 3-7	90C	2	1"	1"	3/8"	0.41 (10.5)	10.51 (267)	7.01 (178)	5.50 (139.8)	9.78 (248.3)	3.56 (90.3)	7.11 (180.6)	17.58 (446.5)	9.79 (248.7)	9.20 (233.7)	5.65 (143.6)	4.92 (125)	6.10 (155)	4.14 (105.1)	7.79 (197.8)	11.93 (302.9)
CME3-8	90D	3	1"	1"	3/8"	0.41 (10.5)	10.51 (267)	7.01 (178)	5.50 (139.8)	9.78 (248.3)	3.56 (90.3)	7.11 (180.6)	19.00 (482.5)	11.21 (284.7)	10.62 (269.7)	7.07 (179.6)	4.92 (125)	6.10 (155)	4.14 (105.1)	7.79 (197.8)	11.93 (302.9)
CME 3-9	90D	3	1"	1"	3/8"	0.41 (10.5)	10.51 (267)	7.01 (178)	5.50 (139.8)	9.78 (248.3)	3.56 (90.3)	7.11 (180.6)	19.00 (482.5)	11.21 (284.7)	10.62 (269.7)	7.07 (179.6)	4.92 (125)	6.10 (155)	4.14 (105.1)	7.79 (197.8)	11.93 (302.9)

1 x 200-240 V, 60 Hz (supply voltage U)

Pump type	Frame size	Hp	NPT		Rp	Dimensions [inches (mm)]															
			A1	A2	A3	A4	B1	B2	B3	H	H1	H2	L1	L2	L3	L4	L5	L6	L7	L8	L9
CME 3-2	71A	0.75	1"	1"	3/8"	0.41 (10.5)	8.35 (212)	6.22 (158)	4.92 (125)	9.17 (233)	2.95 (75)	6.51 (165.3)	12.91 (328)	5.19 (131.7)	4.22 (107.2)	2.82 (71.6)	3.78 (96)	5.39 (137)	2.37 (60.1)	7.73 (196.3)	10.09 (256.4)
CME 3-3	80B	1.5	1"	1"	3/8"	0.41 (10.5)	8.35 (212)	6.22 (158)	4.92 (125)	9.17 (233)	2.95 (75)	6.51 (165.3)	12.91 (328)	5.19 (131.7)	4.22 (107.2)	2.82 (71.6)	3.78 (96)	5.39 (137)	2.37 (60.1)	7.73 (196.3)	10.09 (256.4)
CME 3-4	80B	1.5	1"	1"	3/8"	0.41 (10.5)	8.35 (212)	6.22 (158)	4.92 (125)	9.17 (233)	2.95 (75)	6.51 (165.3)	13.62 (346)	5.89 (149.7)	4.93 (125.2)	3.53 (89.6)	3.78 (96)	5.39 (137)	2.37 (60.1)	7.73 (196.3)	10.09 (256.4)
CME 3-5	80B	1.5	1"	1"	3/8"	0.41 (10.5)	8.35 (212)	6.22 (158)	4.92 (125)	9.17 (233)	2.95 (75)	6.51 (165.3)	14.33 (364)	6.60 (167.7)	5.64 (143.2)	4.24 (107.6)	3.78 (96)	5.39 (137)	2.37 (60.1)	7.73 (196.3)	10.09 (256.4)
CME 3-6	90C	2	1"	1"	3/8"	0.41 (10.5)	8.35 (212)	7.01 (178)	5.50 (139.8)	9.78 (248.3)	3.56 (90.3)	7.11 (180.6)	16 (406.5)	9.79 (248.7)	9.20 (233.7)	5.65 (143.6)	4.92 (125)	6.10 (155)	4.14 (105.1)	6.21 (157.8)	10.35 (262.9)
CME 3-7	90C	2	1"	1"	3/8"	0.41 (10.5)	8.35 (212)	7.01 (178)	5.50 (139.8)	9.78 (248.3)	3.56 (90.3)	7.11 (180.6)	16 (406.5)	9.79 (248.7)	9.20 (233.7)	5.65 (143.6)	4.92 (125)	6.10 (155)	4.14 (105.1)	6.21 (157.8)	10.35 (262.9)

CME 5-A

(A = cast iron, A48 CL30 / EN-GJL-200)

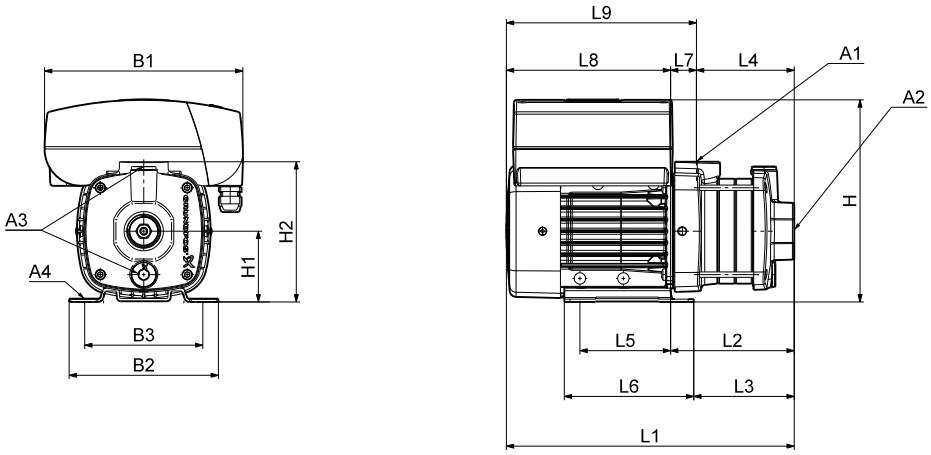

Dimensions

3 x 200-240 V, 60 Hz (supply voltage V)

Pump type	Frame size	Hp	NPT		Rp	Dimensions [inches (mm)]															
			A1	A2	A3	A4	B1	B2	B3	H	H1	H2	L1	L2	L3	L4	L5	L6	L7	L8	L9
CME 5-4	90C	2	1"	1.25"	3/8"	0.41 (10.5)	10.51 (267)	7.01 (178)	5.50 (139.8)	9.78 (248.3)	3.56 (90.3)	7.94 (201.6)	15.38 (390.7)	7.59 (192.9)	7.00 (177.9)	4.23 (107.5)	4.92 (125)	6.10 (155)	3.36 (85.4)	7.79 (197.8)	11.15 (283.2)
CME 5-5	100A	3	1"	1.25"	3/8"	0.47 (12)	11.45 (290.8)	7.87 (200)	6.30 (160)	11.82 (300.3)	3.93 (99.8)	8.31 (211.1)	19.14 (486.1)	8.49 (215.7)	7.84 (199.2)	4.94 (125.5)	5.51 (140)	6.81 (173)	3.55 (90.2)	10.65 (270.4)	14.20 (360.6)

3 x 440-480 V, 60 Hz (supply voltage T)

Pump type	Frame size	Hp	NPT		Rp	Dimensions [inches (mm)]															
			A1	A2	A3	A4	B1	B2	B3	H	H1	H2	L1	L2	L3	L4	L5	L6	L7	L8	L9
CME 5-4	90C	2	1"	1.25"	3/8"	0.41 (10.5)	10.51 (267)	7.01 (178)	5.50 (139.8)	9.78 (248.3)	3.56 (90.3)	7.94 (201.6)	15.38 (390.7)	7.59 (192.9)	7.00 (177.9)	4.23 (107.5)	4.92 (125)	6.10 (155)	3.36 (85.4)	7.79 (197.8)	11.15 (283.2)
CME5-5	90D	3	1"	1.25"	3/8"	0.41 (10.5)	10.51 (267)	7.01 (178)	5.50 (139.8)	9.78 (248.3)	3.56 (90.3)	7.94 (201.6)	16.09 (408.7)	8.30 (210.9)	7.71 (195.9)	4.94 (125.5)	4.92 (125)	6.10 (155)	3.36 (85.4)	7.79 (197.8)	11.15 (283.2)

1 x 200-240 V, 60 Hz (supply voltage U)

Pump type	Frame size	Hp	NPT		Rp	Dimensions [inches (mm)]															
			A1	A2	A3	A4	B1	B2	B3	H	H1	H2	L1	L2	L3	L4	L5	L6	L7	L8	L9
CME 5-2	80B	1.5	1"	1.25"	3/8"	0.41 (0.5)	8.35 (212)	6.22 (158)	4.92 (125)	9.17 (233)	2.95 (75)	5.85 (148.5)	12.13 (308.2)	4.41 (111.9)	3.44 (87.4)	3.34 (84.8)	3.78 (96)	5.39 (137)	1.07 (27.1)	7.73 (196.3)	8.80 (223.4)
CME 5-3	80B	1.5	1"	1.25"	3/8"	0.41 (10.5)	8.35 (212)	6.22 (158)	4.92 (125)	9.17 (233)	2.95 (75)	5.85 (148.5)	12.84 (326.2)	5.11 (129.9)	4.15 (105.4)	4.05 (102.8)	3.78 (96)	5.39 (137)	1.07 (27.1)	7.73 (196.3)	8.80 (223.4)
CME 5-4	90C	2	1"	1.25"	3/8"	0.41 (10.5)	8.35 (212)	7.01 (178)	5.50 (139.8)	9.78 (248.3)	3.56 (90.3)	7.94 (201.6)	13.81 (350.7)	7.59 (192.9)	7.00 (177.9)	4.23 (107.5)	4.92 (125)	6.10 (155)	3.36 (85.4)	6.21 (157.8)	9.57 (243.2)

CME 5-I and CME 5-G

(I = AISI 304 / EN 1.4301 and G = AISI 316 / EN 1.4401)

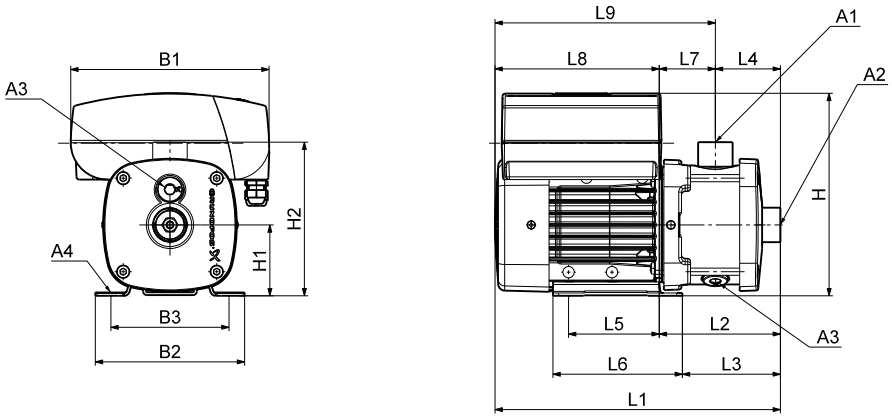

Dimensions

3 x 200-240 V, 60 Hz (supply voltage V)

Pump type	Frame size	Hp	NPT		Rp	Dimensions [inches (mm)]															
			A1	A2	A3	A4	B1	B2	B3	H	H1	H2	L1	L2	L3	L4	L5	L6	L7	L8	L9
CME 5-4	90C	2	1"	1.25"	3/8"	0.41 (10.5)	10.51 (267)	7.01 (178)	5.50 (139.8)	9.78 (248.3)	3.56 (90.3)	7.11 (180.6)	15.45 (392.5)	7.67 (194.7)	7.07 (179.7)	3.53 (89.6)	4.92 (125)	6.10 (155)	4.14 (105.1)	7.79 (197.8)	11.93 (302.9)
CME 5-5	100A	3	1"	1.25"	3/8"	0.47 (12)	11.45 (290.8)	7.87 (200)	6.30 (160)	11.82 (300.3)	3.93 (99.8)	7.48 (190.1)	19.27 (489.4)	8.62 (219)	7.97 (202)	4.24 (107.6)	5.51 (140)	6.81 (173)	4.39 (111.4)	10.65 (270.4)	15.03 (381.8)
CME 5-6	100A	3	1	1.25"	3/8"	0.47 (12)	11.45 (290.8)	7.87 (200)	6.30 (160)	11.82 (300.3)	3.93 (99.8)	7.48 (90.1)	20.69 (525.4)	10.04 (255)	9.39 (238.5)	5.65 (143.6)	5.51 (140)	6.81 (173)	4.39 (111.4)	10.65 (270.4)	15.03 (381.8)
CME5-7	100A	3	1	1.25"	3/8"	0.47 (12)	11.45 (290.8)	7.87 (200)	6.30 (160)	11.82 (300.3)	3.93 (99.8)	7.48 (190.1)	20.69 (525.4)	10.04 (255)	9.39 (238.5)	5.65 (143.6)	5.51 (140)	6.81 (173)	4.39 (111.4)	10.65 (270.4)	15.03 (381.8)
CME 5-8	112C	5	1"	1.25"	3/8"	0.47 (12)	11.46 (291)	9.06 (230)	7.48 (190)	9.37 (238.1)	3.15 (80.1)	6.71 (170.4)	19.70 (500.3)	12.05 (306.1)	11.26 (286.1)	7.07 (179.6)	5.51 (140)	7.09 (180)	4.98 (126.5)	7.65 (194.2)	12.63 (320.7)

3 x 440-480 V, 60 Hz (supply voltage T)

Pump type	Frame size	Hp	NPT		Rp	Dimensions [inches (mm)]															
			A1	A2	A3	A4	B1	B2	B3	H	H1	H2	L1	L2	L3	L4	L5	L6	L7	L8	L9
CME 5-4	90C	2	1"	1.25"	3/8"	0.41 (10.5)	10.51 (267)	7.01 (178)	5.50 (139.8)	9.78 (248.3)	3.56 (90.3)	7.11 (180.6)	15.45 (392.5)	7.67 194.70	7.07 (179.7)	3.53 (89.6)	4.92 (125)	6.10 (155)	4.14 (105.1)	7.79 (197.8)	11.93 (302.9)
CME5-5	90D	3	1"	1.25"	3/8"	0.41 (10.5)	10.51 (267)	7.01 (178)	5.50 (139.8)	9.78 (248.3)	3.56 (90.3)	7.11 (180.6)	16.16 (410.5)	8.37 212.70	7.78 (197.7)	4.24 (107.6)	4.92 (125)	6.10 (155)	4.14 (105.1)	7.79 (197.8)	11.93 (302.9)
CME 5-6	90D	3	1"	1.25"	3/8"	0.41 (10.5)	10.51 (267)	7.01 (178)	5.50 (139.8)	9.78 (248.3)	3.56 (90.3)	7.11 (180.6)	17.58 (446.5)	9.79 248.70	9.20 (233.7)	5.65 (143.6)	4.92 (125)	6.10 (155)	4.14 (105.1)	7.79 (197.8)	11.93 (302.9)
CME 5-7	90D	3	1"	1.25"	3/8"	0.41 (10.5)	10.51 (267)	7.01 (178)	5.50 (139.8)	9.78 (248.3)	3.56 (90.3)	7.11 (180.6)	17.58 (446.5)	9.79 248.70	9.20 (233.7)	5.65 (143.6)	4.92 (125)	6.10 (155)	4.14 (105.1)	7.79 (197.8)	11.93 (302.9)

1 x 200-240 V, 60 Hz (supply voltage U)

Pump type	Frame size	Hp	NPT		Rp	Dimensions [inches (mm)]															
			A1	A2	A3	A4	B1	B2	B3	H	H1	H2	L1	L2	L3	L4	L5	L6	L7	L8	L9
CME 5-2	80B	1.5	1"	1.25"	3/8"	0.41 (10.5)	8.35 (212)	6.22 (158)	4.92 (125)	9.17 (233)	2.95 (75)	6.51 (165.3)	12.91 (328)	5.19 (131.7)	4.22 (107.2)	2.82 (71.6)	3.78 (96)	5.39 (137)	2.37 (60.1)	7.73 (196.3)	10.09 (256.4)
CME 5-3	80B	1.5	1"	1.25"	3/8"	0.41 (10.5)	8.35 (212)	6.22 (158)	4.92 (125)	9.17 (233)	2.95 (75)	6.51 (165.3)	12.91 (328)	5.19 (131.7)	4.22 (107.2)	2.82 (71.6)	3.78 (96)	5.39 (137)	2.37 (60.1)	7.73 (196.3)	10.09 (256.4)
CME 5-4	90C	2	1"	1.25"	3/8"	0.41 (10.5)	8.35 (212)	7.01 (178)	5.50 (139.8)	9.78 (248.3)	3.56 (90.3)	7.11 (180.6)	13.88 (352.5)	7.67 (194.7)	7.07 (179.7)	3.53 (89.6)	4.92 (125)	6.10 (155)	4.14 (105.1)	6.21 (157.8)	10.35 (262.9)

CME 10-A

(A = cast iron, A48 CL30 / EN-GJL-200)

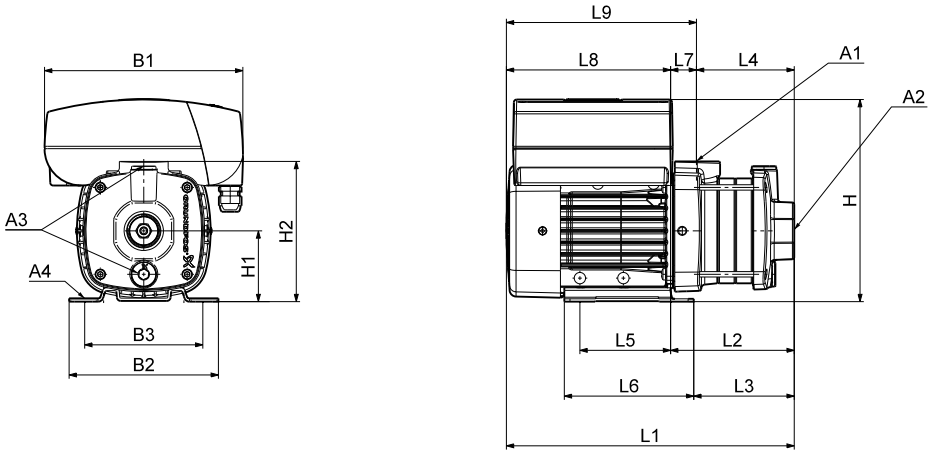

Dimensions

3 x 200-240 V, 60 Hz (supply voltage V)

Pump type	Frame size	Hp	NPT		Rp	Dimensions [inches (mm)]															
			A1	A2	A3	A4	B1	B2	B3	H	H1	H2	L1	L2	L3	L4	L5	L6	L7	L8	L9
CME 10-2	100A	3	1.5"	1.5"	3/8"	0.47 (12)	11.46 (291)	7.87 (200)	6.30 (160)	8.90 (226.1)	2.68 (68.1)	8.26 (209.9)	16.54 (420.1)	8.64 (219.4)	7.99 (202.9)	3.83 (97.2)	5.51 (140)	6.81 (173)	4.81 (122.2)	7.90 (200.7)	12.71 (322.9)
CME 10-3	112C	5	1.5"	1.5"	3/8"	0.47 (12)	11.45 (290.8)	9.06 (230)	7.48 (190)	12.30 (312.3)	4.40 (111.8)	9.98 (253.6)	19.91 (505.8)	9.52 (241.9)	8.74 (221.9)	5.01 (127.2)	5.51 (140)	7.09 (180)	4.52 (114.7)	10.39 (263)	14.91 (378.6)

3 x 440-480 V, 60 Hz (supply voltage T)

Pump type	Frame size	Hp	NPT		Rp	Dimensions [inches (mm)]															
			A1	A2	A3	A4	B1	B2	B3	H	H1	H2	L1	L2	L3	L4	L5	L6	L7	L8	L9
CME 10-2	90D	3	1.5"	1.5"	3/8"	0.47 (12)	10.51 (267)	7.83 (199)	6.30 (159.9)	10.17 (258.3)	3.95 (100.3)	9.53 (242.1)	15.69 (398.4)	7.47 (189.7)	6.88 (174.7)	3.83 (97.2)	5.51 (140)	6.69 (170)	3.64 (92.5)	8.22 (208.7)	11.86 (301.2)
CME 10-3	112C	5	1.5"	1.5"	3/8"	0.47 (12)	11.45 (290.8)	9.06 (230)	7.48 (190)	12.30 (312.3)	4.40 (111.8)	9.98 (253.6)	19.91 (505.7)	9.52 (241.8)	8.73 (221.8)	5.01 (127.2)	5.51 (140)	7.09 (180)	4.51 (114.6)	10.39 (263.9)	14.90 (378.5)

1 x 200-240 V, 60 Hz (supply voltage U)

Pump type	Frame size	Hp	NPT		Rp	Dimensions [inches (mm)]															
			A1	A2	A3	A4	B1	B2	B3	H	H1	H2	L1	L2	L3	L4	L5	L6	L7	L8	L9
CME 10-1	80B	1.5	1.5"	1.5"	3/8"	0.41 (10.5)	8.35 (212)	6.22 (158)	4.92 (125)	10.16 (258)	3.94 (100)	9.52 (241.8)	13.85 (351.7)	6.12 (155.4)	5.15 (130.9)	3.83 (97.2)	3.74 (95)	5.39 (137)	2.29 (58.2)	7.73 (196.3)	10.02 (254.5)

CME 10-I and CME 10-G

(I = AISI 304 / EN 1.4301 and G = AISI 316 / EN 1.4401)

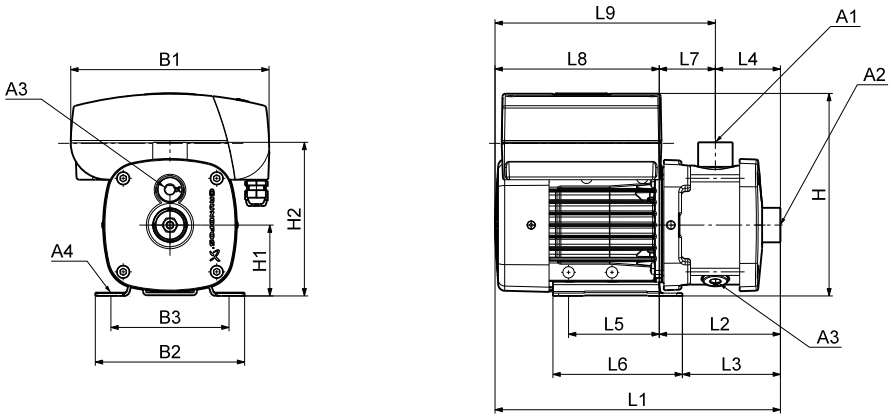

TM04 2247 2208

Dimensions3 x 200-240 V, 60 Hz (supply voltage V)

Pump type	Frame size	Hp	NPT		Rp	Dimensions [inches (mm)]															
			A1	A2	A3	A4	B1	B2	B3	H	H1	H2	L1	L2	L3	L4	L5	L6	L7	L8	L9
CME 10-2	100A	3	1.5"	1.5"	3/8"	0.47	11.46	7.87	6.30	8.90	2.68	7.35	17.72	9.82	9.17	4.13	5.51	6.81	5.69	7.90	13.59
						(12)	(291)	(200)	(160)	(226.1)	(68.1)	(186.7)	(450.1)	(249.4)	(232.9)	(105)	(140)	(173)	(144.4)	(200.7)	(345.1)
CME 10-3	112C	5	1.5"	1.5"	3/8"	0.47	11.45	9.06	7.48	12.30	4.40	9.07	19.91	9.52	8.74	4.13	5.51	7.09	5.39	10.39	15.78
						(12)	(290.8)	(230)	(190)	(312.3)	(111.8)	(230.4)	(505.8)	241.90	(221.9)	(105)	(140)	(180)	(136.9)	(263.9)	(400.8)
CME 10-4	132F	7.5	1.5"	1.5"	3/8"	0.47	13.62	10.08	8.50	14.50	5.19	9.86	22.80	10.98	10.20	5.31	5.51	7.09	5.67	11.81	17.48
						(12)	(346)	(256)	(216)	(368.3)	(131.8)	(250.4)	(579)	279.00	(259)	(135)	(140)	(180)	(144)	(300)	(444)
CME 10-5	132F	7.5	1.5"	1.5"	3/8"	0.47	13.62	10.08	8.50	14.50	5.19	9.86	25.16	13.35	12.56	7.68	5.51	7.09	5.67	11.81	17.48
						(12)	(346)	(256)	(216)	(368.3)	(131.8)	(250.4)	(639)	(339)	(319)	(195)	(140)	(180)	(144)	(300)	(444)

3 x 440-480 V, 60 Hz (supply voltage T)

Pump type	Frame size	Hp	NPT		Rp	Dimensions [inches (mm)]															
			A1	A2	A3	A4	B1	B2	B3	H	H1	H2	L1	L2	L3	L4	L5	L6	L7	L8	L9
CME 10-2	90D	3	1.5"	1.5"	3/8"	0.47	10.51	7.83	6.30	10.17	3.95	8.62	16.87	8.65	8.06	4.13	5.51	6.69	4.52	8.22	12.73
						(12)	(267)	(199)	(159.9)	(258.3)	(100.3)	(218.9)	(428.4)	(219.7)	(204.7)	(105)	(140)	(170)	(114.7)	(208.7)	(323.4)
CME 10-3	112C	5	1.5"	1.5"	3/8"	0.47	11.45	9.06	7.48	12.30	4.40	9.07	19.91	9.52	8.73	4.13	5.51	7.09	5.39	10.39	15.78
						(12)	(290.8)	(230)	(190)	(312.3)	(111.8)	(230.4)	(505.7)	(241.8)	(221.8)	(105)	(140)	(180)	(136.8)	(263.9)	(400.7)
CME10-4	112E	7.5	1.5"	1.5"	3/8"	0.47	11.45	9.06	7.48	12.30	4.40	9.07	21.76	11.37	10.58	5.31	5.51	7.09	6.06	10.39	16.44
						(12)	(290.8)	(230)	(190)	(312.3)	(111.8)	(230.4)	(552.7)	(288.8)	(268.8)	(135)	(140)	(180)	(153.8)	(263.9)	(417.7)
CME 10-5	112E	7.5	1.5"	1.5"	3/8"	0.47	11.45	9.06	7.48	12.30	4.40	9.07	24.12	13.73	12.94	7.68	5.51	7.09	6.06	10.39	16.44
						(12)	(290.8)	(230)	(190)	(312.3)	(111.8)	(230.4)	(612.7)	(348.8)	(328.8)	(195)	(140)	(180)	(153.8)	(263.9)	(417.7)

1 x 200-240 V, 60 Hz (supply voltage U)

Pump type	Frame size	Hp	NPT		Rp	Dimensions [inches (mm)]															
			A1	A2	A3	A4	B1	B2	B3	H	H1	H2	L1	L2	L3	L4	L5	L6	L7	L8	L9
CME 10-1	80B	1.5	1.5"	1.5"	3/8"	0.41	8.35	6.22	4.92	10.16	3.94	8.61	15.03	7.30	6.33	4.13	3.74	5.39	3.17	7.73	10.89
						(10.5)	(212)	(158)	(125)	(258)	(100)	(218.6)	(381.7)	(185.4)	(160.9)	(105)	(95)	(137)	(80.4)	(196.3)	(276.7)

CME 15-A

(A = cast iron, A48 CL30 / EN-GJL-200)

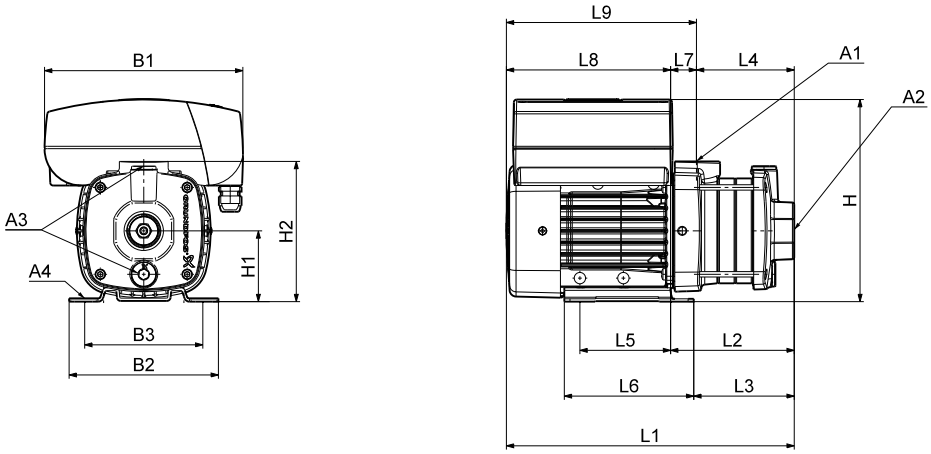

Dimensions

3 x 200-240 V, 60 Hz (supply voltage V)

Pump type	Frame size	Hp	NPT		Rp	Dimensions [inches (mm)]															
			A1	A2	A3	A4	B1	B2	B3	H	H1	H2	L1	L2	L3	L4	L5	L6	L7	L8	L9
CME 15-1	100A	3	2"	2"	3/8"	0.47	11.46	7.87	6.30	8.90	2.68	8.26	16.54	8.64	7.99	3.83	5.51	6.81	4.81	7.90	12.71
						(12)	(291)	(200)	(160)	(226.1)	(68.1)	(209.9)	(420.1)	(219.4)	(202.9)	(97.2)	(140)	(173)	(122.2)	(200.7)	(322.9)
CME15-2	112C	5	2"	2"	3/8"	0.47	11.45	9.06	7.48	12.30	4.40	9.98	18.73	8.34	7.56	3.83	5.51	7.09	4.52	10.39	14.91
						(12)	(291)	(230)	(190)	(312.3)	(111.8)	(253.6)	(475.8)	(211.9)	(191.9)	(97.2)	(140)	(180)	(114.7)	(263.9)	(378.6)
CME 15-3	132F	7.5	2"	2"	3/8"	0.47	13.62	10.08	8.50	14.50	5.19	10.77	21.61	9.80	9.02	5.01	5.51	7.09	4.80	11.81	16.61
						(12)	(346)	(256)	(216)	(368.3)	(131.8)	(273.6)	(549)	(249)	(229)	(127.2)	(140)	(180)	(121.8)	(300)	(421.8)

3 x 440-480 V, 60 Hz (supply voltage T)

Pump type	Frame size	Hp	NPT		Rp	Dimensions [inches (mm)]															
			A1	A2	A3	A4	B1	B2	B3	H	H1	H2	L1	L2	L3	L4	L5	L6	L7	L8	L9
CME 15-1	90D	3	2"	2"	3/8"	0.47	10.51	7.83	6.30	10.17	3.95	9.53	15.69	7.47	6.88	3.83	5.51	6.69	3.64	8.22	11.86
						(12)	(267)	(199)	(160)	(258.3)	(100.3)	(242.1)	(398.4)	(189.7)	(174.7)	(97.2)	(140)	(170)	(92.5)	(208.7)	(301.2)
CME 15-2	112C	5	2"	2"	3/8"	0.47	11.45	9.06	7.48	12.30	4.40	9.98	18.73	8.34	7.55	3.83	5.51	7.09	4.51	10.39	14.90
						(12)	(291)	(230)	(190)	(312.3)	(111.8)	(253.6)	(475.7)	(211.8)	(191.8)	(97.2)	(140)	(180)	(115)	(264)	(379)
CME 15-3	112E	7.5	2"	2"	3/8"	0.47	11.45	9.06	7.48	12.30	4.40	9.98	20.58	10.19	9.40	5.01	5.51	7.09	5.18	10.39	15.57
						(12)	(291)	(230)	(190)	(312)	(112)	(254)	(523)	(259)	(239)	(127)	(140)	(180)	(132)	(264)	(396)

CME 15-I and CME 15-G

(I = AISI 304 / EN 1.4301 and G = AISI 316 / EN 1.4401)

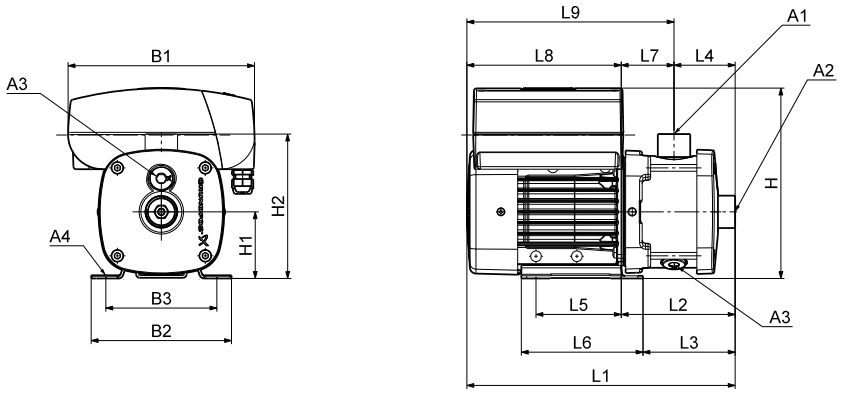

Dimensions

3 x 200-240 V, 60 Hz (supply voltage V)

Pump type	Frame size	Hp	NPT		Rp	Dimensions [inches (mm)]															
			A1	A2	A3	A4	B1	B2	B3	H	H1	H2	L1	L2	L3	L4	L5	L6	L7	L8	L9
CME 15-1	100A	3	2	2	3/8"	0.47	11.46	7.87	6.30	8.90	2.68	7.28	17.72	9.82	9.17	4.13	5.51	6.81	5.69	7.90	13.59
						(12)	(291)	(200)	(160)	(226.1)	(68.1)	(185)	(450.1)	(249.4)	(232.9)	(105)	(140)	(173)	(144.4)	(200.7)	(345.1)
CME15-2	112C	5	2	2	3/8"	0.47	11.45	9.06	7.48	12.30	4.40	9.00	19.91	9.52	8.74	4.13	5.51	7.09	5.39	10.39	15.78
						(12)	(290.8)	(230)	(190)	(312.3)	(111.8)	(228.7)	(505.8)	(241.9)	(221.9)	(105)	(140)	(180)	(136.9)	(263.9)	(400.8)
CME 15-3	132F	7.5	2	2	3/8"	0.47	13.62	10.08	8.50	14.50	5.19	9.79	21.61	9.80	9.02	4.13	5.51	7.09	5.67	11.81	17.48
						(12)	(346)	(256)	(216)	(368.3)	(131.8)	(248.7)	(549)	(249)	(229)	(105)	(140)	(180)	(144)	(300)	(444)

3 x 440-480 V, 60 Hz (supply voltage T)

Pump type	Frame size	Hp	NPT		Rp	Dimensions [inches (mm)]															
			A1	A2	A3	A4	B1	B2	B3	H	H1	H2	L1	L2	L3	L4	L5	L6	L7	L8	L9
CME 15-1	90D	3	2"	2"	3/8"	0.47	10.51	7.83	6.30	10.17	3.95	8.55	16.87	8.65	8.06	4.13	5.51	6.69	4.52	8.22	12.73
						(12)	(267)	(199)	(159.9)	(258.3)	(100.3)	(217.2)	(428.4)	(219.7)	(204.7)	(105)	(140)	(170)	(114.7)	(208.7)	(323.4)
CME 15-2	112C	5	2"	2"	3/8"	0.47	11.45	9.06	7.48	12.30	4.40	9.00	19.91	9.52	8.73	4.13	5.51	7.09	5.39	10.39	15.78
						(12)	(290.8)	(230)	(190)	(312.3)	(111.8)	(228.7)	(505.7)	(241.8)	(221.8)	(105)	(140)	(180)	(136.8)	(263.9)	(400.7)
CME 15-3	112E	7.5	2"	2"	3/8"	0.47	11.45	9.06	7.48	12.30	4.40	9.00	20.58	10.19	9.40	4.13	5.51	7.09	6.06	10.39	16.44
						(12)	(291)	(230)	(190)	(312)	(112)	(229)	(523)	(259)	(239)	(105)	(140)	(180)	(154)	(264)	(418)

CME 25-A

(A = cast iron, A48 CL30 / EN-GJL-200)

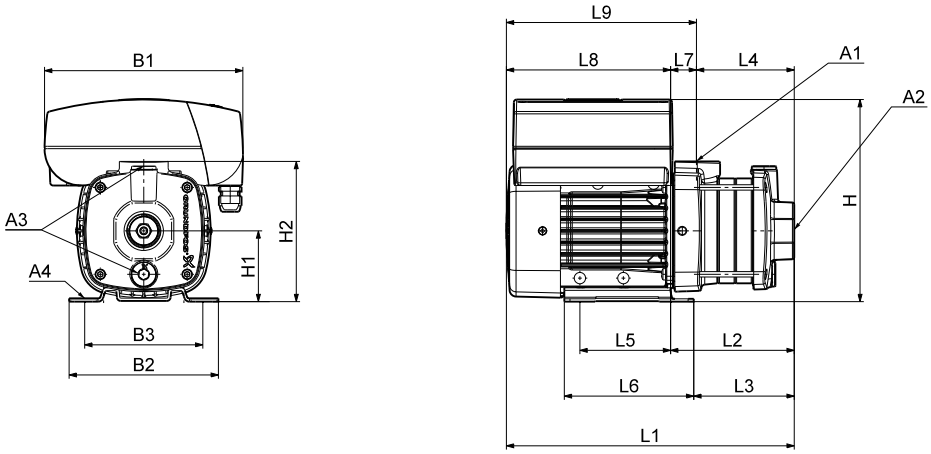

Dimensions

3 x 200-240 V, 60 Hz (supply voltage V)

Pump type	Frame size	Hp	NPT		Rp	Dimensions [inches (mm)]															
			A1	A2	A3	A4	B1	B2	B3	H	H1	H2	L1	L2	L3	L4	L5	L6	L7	L8	L9
CME 25-1	112C	5	2"	2"	3/8"	0.47 (12)	11.45 (290.8)	9.06 (230)	7.48 (190)	12.30 (312.3)	4.40 (111.8)	9.98 (253.6)	18.73 (475.8)	8.34 (211.9)	7.56 (191.9)	3.83 (97.2)	5.51 (140)	7.09 (180)	4.52 (114.7)	10.39 (263.9)	14.91 (378.6)
CME 25-2	132F	7.5	2"	2"	3/8"	0.47 (12)	13.62 (346)	10.08 (256)	8.50 (216)	14.50 (368.3)	5.19 (131.8)	10.77 (273.6)	20.43 (519)	8.62 (219)	7.83 (199)	3.83 (97.2)	5.51 (140)	7.09 (180)	4.80 (121.8)	11.81 (300)	16.61 (421.8)

3 x 440-480 V, 60 Hz (supply voltage T)

Pump type	Frame size	Hp	NPT		Rp	Dimensions [inches (mm)]															
			A1	A2	A3	A4	B1	B2	B3	H	H1	H2	L1	L2	L3	L4	L5	L6	L7	L8	L9
CME 25-1	112C	5	2"	2"	3/8"	0.47 (12)	11.45 (291)	9.06 (230)	7.48 (190)	12.30 (312)	4.40 (112)	9.98 (254)	18.73 (476)	8.34 (212)	7.55 (192)	3.83 (97)	5.51 (140)	7.09 (180)	4.51 (115)	10.39 (264)	14.90 (379)
CME 25-2	112E	7.5	2"	2"	3/8"	0.47 (12)	11.45 (291)	9.06 (230)	7.48 (190)	12.30 (312)	4.40 (112)	9.98 (254)	19.40 (493)	9.01 (229)	8.22 (209)	3.83 (97)	5.51 (140)	7.09 (180)	5.18 (132)	10.39 (264)	15.57 (396)

CME 25-I and CME 25-G

(I = AISI 304 / EN 1.4301 and G = AISI 316 / EN 1.4401)

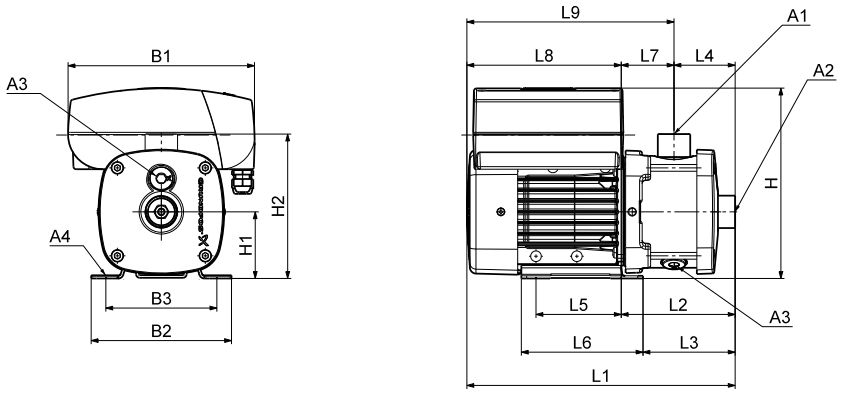

TM04 2247 2208

Dimensions

3 x 200-240 V, 60 Hz (supply voltage V)

Pump type	Frame size	Hp	NPT		Rp	Dimensions [inches (mm)]															
			A1	A2	A3	A4	B1	B2	B3	H	H1	H2	L1	L2	L3	L4	L5	L6	L7	L8	L9
CME 25-1	112C	5	2"	2"	3/8"	0.47 (12)	11.45 (290.8)	9.06 (230)	7.48 (190)	12.30 (312.3)	4.40 (111.8)	9.00 (228.7)	19.91 (505.8)	9.52 (241.9)	8.74 (221.9)	4.13 (105)	5.51 (140)	7.09 (180)	5.39 (136.9)	10.39 (263.9)	15.78 (400.8)
CME 25-2	132F	7.5	2"	2"	3/8"	0.47 (12)	13.62 (346)	10.08 (256)	8.50 (216)	14.50 (368.3)	5.19 (131.8)	9.79 (248.7)	21.61 (549)	9.80 (249)	9.02 (229)	4.13 (105)	5.51 (140)	7.09 (180)	5.67 (144)	11.81 (300)	17.48 (444)

3 x 440-480 V, 60 Hz (supply voltage T)

Pump type	Frame size	Hp	NPT		Rp	Dimensions [inches (mm)]															
			A1	A2	A3	A4	B1	B2	B3	H	H1	H2	L1	L2	L3	L4	L5	L6	L7	L8	L9
CME 25-1	112C	5	2"	2"	3/8"	0.47 (12	11.45 291	9.06 230	7.48 190	12.30 312	4.40 112	9.00 229	19.91 506	9.52 242	8.73 222	4.13 105	5.51 140	7.09 180	5.39 137	10.39 264	15.78 401
CME 25-2	112E	7.5	2"	2"	3/8"	0.47 (12)	11.45 (291)	9.06 (230)	7.48 (190)	12.30 (312)	4.40 (112)	9.00 (229)	20.58 (523)	10.19 (259)	9.40 (239)	4.13 (105)	5.51 (140)	7.09 (180)	6.06 (154)	10.39 (264)	16.44 (418)

CME Plus technical data

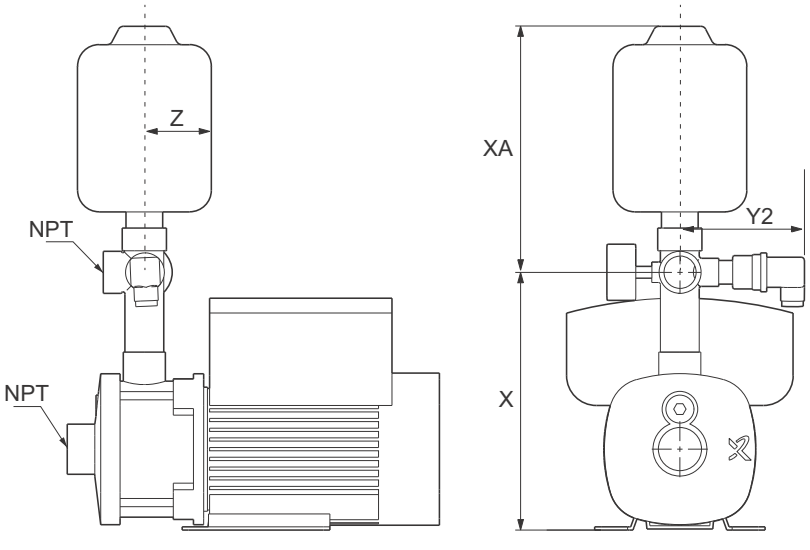

CME Plus 1, 3, 5, 10 kit dimensions

Pump type	X (With 5-way valve) [inches (mm)]	X A- (With 5-way valve) [inches (mm)]	Y2 [inches (mm)]	Z [inches (mm)]	Kit weight [lb (kg)]
CME 1	10.50 (267)	9.25 (235)	6.00 (153)	2.25 (58)	7.2 (3.3)
CME 3	10.50 (267)	10.50 (267)	6.00 (153)	2.50 (64)	9.1 (4.1)
CME 5	11.75 (299)	10.50 (267)	6.00 (153)	2.50 (64)	12.1 (5.5)
CME 10	13.25 (337)	15.00 (381)	6.00 (153)	4.00 (102)	16.0 (7.3)

Note: Dimensions, tolerance ± 0.5 inches

Additional materials

	Description	Material
Pressure transducer	4-20 mA signal	316 SS
Diaphragm tank		A10008 Steel
5-way valve		304 SS / EPDM

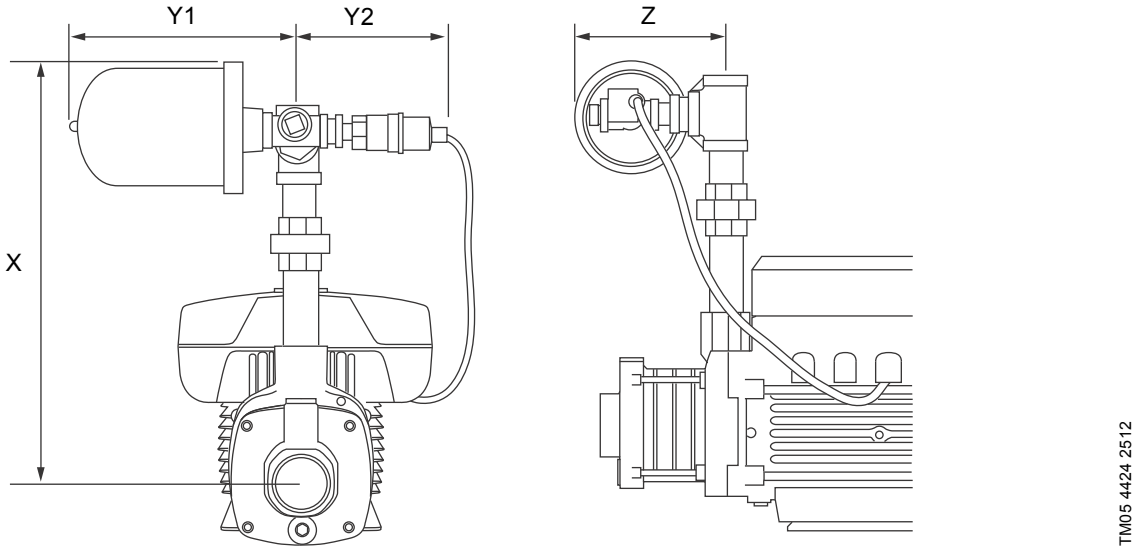

CME Plus 15, 25 kit dimensions

Pump type	X [inches (mm)]	Y1 [inches (mm)]	Y2 [inches (mm)]	Z [inches (mm)]	Kit weight [lb (kg)]
CME 15	21.50 (547)	9.75 (248)	6.00 (153)	10.88 (277)	22.1 (10.0)
CME 25	21.50 (547)	9.75 (248)	6.00 (153)	10.88 (277)	25.6 (11.6)

Note: Dimensions, tolerance ± 0.5 inches

Additional materials

	Description	Material
Pressure transducer	4-20 mA signal	316 SS
Diaphragm tank		A10008 Steel
Hardware	Nipple	304 SS
	Bushing	304 SS
	Union	304 SS
	Tee	304 SS
	Close nipple	304 SS
	Cross	316 SS
	Plug	304 SS
	Pipe nipple	316 SS
	Bushing for Sensor	316 SS

15. Weights and shipping volume

All weights and volumes refer to CM, CME pumps with standard pipe connections.

CM 1-A

(A = cast iron, A48 CL30 / EN-GJL-200)

Supply voltage	Pump type	Net weight		Gross weight		Shipping volume	
		[lb]	[kg]	[lb]	[kg]	[ft^3]	[m^3]
1 x 115/230 V, 60 Hz (supply voltage B)	CM 1-2	25.8	11.7	31.3	14.2	1.05	0.0296
	CM 1-3	26.5	12.0	32.0	14.5	1.05	0.0296
	CM 1-4	26.9	12.2	32.4	14.7	1.31	0.0370
	CM 1-5	27.6	12.5	33.1	15.0	1.31	0.0370
3 x 208-230 V / 440-480 V, 60 Hz (supply voltage E) 3 x 575 V, 60 Hz (supply voltage H)	CM 1-2	24.3	11.0	29.8	13.5	1.05	0.0296
	CM 1-3	24.9	11.3	30.4	13.8	1.05	0.0296
	CM 1-4	26.9	12.2	32.4	14.7	1.31	0.0370
	CM 1-5	27.6	12.5	33.1	15.0	1.31	0.0370

CM 3-A

(A = cast iron, A48 CL30 / EN-GJL-200)

Supply voltage	Pump type	Net weight		Gross weight		Shipping volume	
		[lb]	[kg]	[lb]	[kg]	[ft^3]	[m^3]
1 x 115/230 V, 60 Hz (supply voltage B)	CM 3-2	25.8	11.7	31.3	14.2	1.05	0.0296
	CM 3-3	26.5	12.0	32.0	14.5	1.05	0.0296
	CM 3-4	27.6	12.5	33.1	15.0	1.31	0.0370
	CM 3-5	30.0	13.6	35.5	16.1	1.31	0.0370
3 x 208-230 V / 440-480 V, 60 Hz (supply voltage E) 3 x 575 V, 60 Hz (supply voltage H)	CM 3-2	24.3	11.0	29.8	13.5	1.05	0.0296
	CM 3-3	26.5	12.0	32.0	14.5	1.05	0.0296
	CM 3-4	26.9	12.2	32.4	14.7	1.31	0.0370
	CM 3-5	30.6	13.9	36.2	16.4	1.31	0.0370

CM 5-A

(A = cast iron, A48 CL30 / EN-GJL-200)

Supply voltage	Pump type	Net weight		Gross weight		Shipping volume	
		[lb]	[kg]	[lb]	[kg]	[ft^3]	[m^3]
1 x 115/230 V, 60 Hz (supply voltage B)	CM 5-2	28.7	13.0	34.2	15.5	1.05	0.0296
	CM 5-3	31.7	14.4	37.3	16.9	1.31	0.0370
	CM 5-4	53.6	24.3	59.1	26.8	1.31	0.0370
3 x 208-230 V / 440-480 V, 60 Hz (supply voltage E) 3 x 575 V, 60 Hz (supply voltage H)	CM 5-2	25.6	11.6	31.1	14.1	1.05	0.0296
	CM 5-3	29.3	13.3	34.8	15.8	1.31	0.0370
	CM 5-4	53.6	24.3	59.1	26.8	1.31	0.0370
	CM 5-5	54.0	24.5	59.5	27.0	1.58	0.0444

CM 10-A

(A = cast iron, A48 CL30 / EN-GJL-200)

Supply voltage	Pump type	Net weight		Gross weight		Shipping volume	
		[lb]	[kg]	[lb]	[kg]	[ft^3]	[m^3]
1 x 115/230 V, 60 Hz (supply voltage B)	CM 10-1	51.6	23.4	57.1	25.9	1.31	0.0370
3 x 208-230 V / 440-480 V, 60 Hz (supply voltage E) 3 x 575 V, 60 Hz (supply voltage H)	CM 10-1	51.6	23.4	57.1	25.9	1.31	0.0370
	CM 10-2	70.3	31.9	75.8	34.4	1.58	0.0444
	CM 10-3	89.9	40.8	95.5	43.3	1.58	0.0444

CM 15-A

(A = cast iron, A48 CL30 / EN-GJL-200)

Supply voltage	Pump type	Net weight		Gross weight		Shipping volume	
		[lb]	[kg]	[lb]	[kg]	[ft^3]	[m^3]
3 x 208-230 V / 440-480 V, 60 Hz (supply voltage E) 3 x 575 V, 60 Hz (supply voltage H)	CM 15-1	67.5	30.6	73.0	33.1	1.31	0.0370
	CM 15-2	87.1	39.5	92.6	42.0	1.58	0.0444
	CM 15-3	106.5	48.3	112.0	50.8	1.75	0.0495

CM 25-A

(A = cast iron, A48 CL30 / EN-GJL-200)

Supply voltage	Pump type	Net weight		Gross weight		Shipping volume	
		[lb]	[kg]	[lb]	[kg]	[ft^3]	[m^3]
3 x 208-230 V / 440-480 V, 60 Hz (supply voltage E) 3 x 575 V, 60 Hz (supply voltage H)	CM 25-1	85.5	38.8	91.1	41.3	1.58	0.0444
	CM 25-2	104.9	47.6	110.5	50.1	1.75	0.0495

CM 1-I and CM 1-G

(I = AISI 304 / EN 1.4301 and G = AISI 316 / EN 1.4401)

Supply voltage	Pump type	Net weight		Gross weight		Shipping volume	
		[lb]	[kg]	[lb]	[kg]	[ft^3]	[m^3]
1 x 115/230 V, 60 Hz (supply voltage B)	CM 1-2	27.1	12.3	32.6	14.8	1.05	0.0296
	CM 1-3	27.3	12.4	32.9	14.9	1.05	0.0296
	CM 1-4	28.0	12.7	33.5	15.2	1.31	0.0370
	CM 1-5	28.9	13.1	34.4	15.6	1.31	0.0370
	CM 1-6	33.3	15.1	38.8	17.6	1.31	0.0370
	CM 1-7	35.7	16.2	41.2	18.7	1.31	0.0370
	CM 1-8	37.0	16.8	42.6	19.3	1.58	0.0444
	CM 1-9	37.3	16.9	42.8	19.4	1.58	0.0444
3 x 208-230 V / 440-480 V, 60 Hz (supply voltage E) 3 x 575 V, 60 Hz (supply voltage H)	CM 1-2	25.6	11.6	31.1	14.1	1.05	0.0296
	CM 1-3	25.8	11.7	31.3	14.2	1.05	0.0296
	CM 1-4	28.0	12.7	33.5	15.2	1.31	0.0370
	CM 1-5	28.9	13.1	34.4	15.6	1.31	0.0370
	CM 1-6	30.2	13.7	35.7	16.2	1.31	0.0370
	CM 1-7	30.2	13.7	35.7	16.2	1.31	0.0370
	CM 1-8	34.6	15.7	40.1	18.2	1.58	0.0444
	CM 1-9	37.3	16.9	42.8	19.4	1.58	0.0444

CM 3-I and CM 3-G

(I = AISI 304 / EN 1.4301 and G = AISI 316 / EN 1.4401)

Supply voltage	Pump type	Net weight		Gross weight		Shipping volume	
		[lb]	[kg]	[lb]	[kg]	[ft^3]	[m^3]
1 x 115/230 V, 60 Hz (supply voltage B)	CM 3-2	27.1	12.3	32.6	14.8	1.05	0.0296
	CM 3-3	27.3	12.4	32.9	14.9	1.05	0.0296
	CM 3-4	31.1	14.1	36.6	16.6	1.31	0.0370
	CM 3-5	34.4	15.6	39.9	18.1	1.31	0.0370
	CM 3-6	52.5	23.8	58.0	26.3	1.58	0.0444
	CM 3-7	52.9	24.0	58.4	26.5	1.58	0.0444
	CM 3-8	54.2	24.6	59.8	27.1	1.58	0.0444
3 x 208-230 V / 440-480 V, 60 Hz (supply voltage E) 3 x 575 V, 60 Hz (supply voltage H)	CM 3-2	25.6	11.6	32.0	14.1	1.05	0.0296
	CM 3-3	27.3	12.4	32.9	14.9	1.05	0.0296
	CM 3-4	28.0	12.7	33.5	15.2	1.31	0.0370
	CM 3-5	32.0	14.5	37.5	17.0	1.31	0.0370
	CM 3-6	35.7	16.2	41.2	18.7	1.31	0.0370
	CM 3-7	52.9	24.0	58.4	26.5	1.58	0.0444
	CM 3-8	54.2	24.6	59.8	27.1	1.58	0.0444
	CM 3-9	54.6	24.7	60.0	27.2	1.58	0.0444

CM 5-I and CM 5-G

(I = AISI 304 / EN 1.4301 and G = AISI 316 / EN 1.4401)

Supply voltage	Pump type	Net weight		Gross weight		Shipping volume	
		[lb]	[kg]	[lb]	[kg]	[ft^3]	[m^3]
1 x 115/230 V, 60 Hz (supply voltage B)	CM 5-2	30.2	13.7	35.7	16.2	1.31	0.0370
	CM 5-3	32.9	14.9	38.5	17.4	1.31	0.0370
	CM 5-4	50.7	23.0	56.2	25.5	1.31	0.0370
3 x 208-230 V / 440-480 V, 60 Hz (supply voltage E) 3 x 575 V, 60 Hz (supply voltage H)	CM 5-2	27.1	12.3	32.6	14.8	1.05	0.0296
	CM 5-3	30.4	13.8	35.9	16.3	1.31	0.0370
	CM 5-4	50.7	23.0	56.2	25.5	1.31	0.0370
	CM 5-5	51.4	23.3	56.9	25.8	1.58	0.0444
	CM 5-6	52.7	23.9	58.2	26.4	1.58	0.0444
	CM 5-7	52.9	24.0	58.4	26.5	1.58	0.0444
	CM 5-8	72.3	32.8	77.8	35.3	1.75	0.0495

CM 10-I and CM 10-G

(I = AISI 304 / EN 1.4301 and G = AISI 316 / EN 1.4401)

Supply voltage	Pump type	Net weight		Gross weight		Shipping volume	
		[lb]	[kg]	[lb]	[kg]	[ft^3]	[m^3]
1 x 115/230 V, 60 Hz (supply voltage B)	CM 10-1	41.5	18.8	46.7	21.3	1.31	0.0370
3 x 208-230 V / 440-480 V, 60 Hz (supply voltage E) 3 x 575 V, 60 Hz (supply voltage H)	CM 10-1	41.5	18.8	47.0	21.3	1.31	0.0370
	CM 10-2	59.3	26.9	64.8	29.4	1.58	0.0444
	CM 10-3	77.8	35.3	83.3	37.8	1.58	0.0444
	CM 10-4	97.7	44.3	103.2	46.8	1.75	0.0495
	CM 10-5	100.8	45.7	106.3	48.2	2.99	0.0847

CM 15-I and CM 15-G

(I = AISI 304 / EN 1.4301 and G = AISI 316 / EN 1.4401)

Supply voltage	Pump type	Net weight		Gross weight		Shipping volume	
		[lb]	[kg]	[lb]	[kg]	[ft^3]	[m^3]
3 x 208-230 V / 440-480 V, 60 Hz (supply voltage E) 3 x 575 V, 60 Hz (supply voltage H)	CM 15-1	58.6	26.6	64.1	29.1	1.58	0.0444
	CM 15-2	77.2	35.0	82.7	37.5	1.58	0.0444
	CM 15-3	95.5	43.3	101.0	45.8	1.75	0.0495

CM 25-I and CM 25-G

(I = AISI 304 / EN 1.4301 and G = AISI 316 / EN 1.4401)

Supply voltage	Pump type	Net weight		Gross weight		Shipping volume	
		[lb]	[kg]	[lb]	[kg]	[ft^3]	[m^3]
3 x 208-230 V / 440-480 V, 60 Hz (supply voltage E) 3 x 575 V, 60 Hz (supply voltage H)	CM 25-1	76.7	34.8	82.2	37.3	1.58	0.0444
	CM 25-2	95.0	43.1	100.5	45.6	1.75	0.0495

CME pumps

Cast iron (A = cast iron, A48 CL30 / EN-GJL-200)

Supply voltage	Pump type	Net wt		Gross wt	
		[lb]	[kg]	[lb]	[kg]
3 x 440-480 V, 60 Hz (supply voltage T)	CME 5-4	44	20	48	22
	CME 5-5	43	19	47	21
	CME 10-2	64	29	68	31
	CME 10-3	91	41	99	45
	CME 15-1	61	28	65	29
	CME 15-2	88	40	96	43
	CME 15-3	111	50	118	54
	CME 25-1	87	39	94	43
	CME 25-2	117	53	129	49
1 x 200-240 V, 60 Hz (supply voltage U)	CME 1-2	30	14	38	17
	CME 1-3	31	14	38	17
	CME 1-4	31	14	39	18
	CME 1-5	34	15	42	19
	CME 3-2	30	14	38	17
	CME 3-3	33	15	40	18
	CME 3-4	33	15	41	19
	CME 3-5	34	15	42	19
	CME 5-2	32	14	39	18
	CME 5-3	32	15	40	18
	CME 5-4	40	18	48	22
	CME 10-1	52	24	56	25
3 x 200-240 V, 60 Hz (supply voltage V)	CME 5-4	45	20	49	22
	CME 5-5	60	27	68	31
	CME 10-2	88	40	96	44
	CME 10-3	86	39	93	42
	CME 15-1	85	39	93	42
	CME 15-2	83	37	90	41
	CME 15-3	116	53	124	56
	CME 25-1	81	37	89	40
	CME 25-2	114	52	123	56

Stainless steel (I = AISI 304/EN 1.4301 and G = AISI 316/EN 1.4401)

Supply voltage	Pump type	Net wt		Gross wt	
		[lb]	[kg]	[lb]	[kg]
3 x 440-480 V, 60 Hz (supply voltage T)	CME 1-9	45	20	49	22
	CME 3-6	43	20	48	22
	CME 3-7	44	20	48	22
	CME 3-8	48	22	52	24
	CME 3-9	48	22	52	24
	CME 5-4	41	19	45	20
	CME 5-5	45	20	49	22
	CME 5-6	46	21	51	23
	CME 5-7	47	21	51	23
	CME 10-2	53	24	56	26
	CME 10-3	79	36	86	39
	CME 10-4	101	46	109	49
	CME 10-5	104	47	112	51
	CME 15-1	52	24	56	25
	CME 15-2	78	35	86	39
	CME 15-3	100	45	108	49
	CME 25-1	78	35	85	39
	CME 25-2	99	45	117	48
1 x 200-240 V, 60 Hz (supply voltage U)	CME 1-2	31	14	39	18
	CME 1-3	32	14	39	18
	CME 1-4	32	15	40	18
	CME 1-5	35	16	43	19
	CME 1-6	36	16	44	20
	CME 1-7	37	17	44	20
	CME 1-8	38	17	46	21
	CME 1-9	41	19	49	22
	CME 3-2	31	14	39	18
	CME 3-3	34	15	41	19
	CME 3-4	34	16	42	19
	CME 3-5	35	16	43	19
	CME 3-6	39	18	47	21
	CME 3-7	40	18	47	21
	CME 5-2	33	15	41	19
	CME 5-3	33	15	41	19
	CME 5-4	37	17	45	20
	CME 10-1	42	19	45	21
3 x 200-240 V, 60 Hz (supply voltage V)	CME 1-9	46	21	50	23
	CME 5-4	42	19	46	21
	CME 5-5	58	26	65	30
	CME 5-6	59	27	67	30
	CME 5-7	59	27	67	30
	CME 5-8	80	36	87	40
	CME 10-2	77	35	85	39
	CME 10-3	73	33	81	37
	CME 10-4	107	49	115	52
	CME 10-5	110	50	118	54
	CME 15-1	77	35	84	38
	CME 15-2	73	33	80	36
	CME 15-3	105	48	113	51
	CME 25-1	72	33	80	36
	CME 25-2	104	47	113	51

16. Motor data

Mains-operated motors, 60 Hz

1 x 115/230 V, 60 Hz (supply voltage B)

Frame size	P_2 [Hp]	Service factor	$I_{1/1}$ [A]	Cos $\varphi_{1/1}$	I_{start}	Speed [rpm]
71	0.8	1.0	7.6 / 3.9	0.76	21.1 / 11.1	3240
80	1.06	1.0	10.6 / 5.4	0.65	33.0 / 16.8	3240
80	1.5	1.0	14.0 / 7.0	0.94	45.4 / 23.0	3320
90	2.03	1.0	19.5 / 9.8	0.97	75.2 / 39.2	3360

3 x 208-230 V / 440-480 V, 60 Hz (supply voltage E)

Frame size	P_2 [Hp]	Service factor	$I_{1/1}$ [A]	Cos $\varphi_{1/1}$	I_{start}	Speed [rpm]
71	0.58	1.0	1.9 - 1.7 / 1.0 - 0.8	0.85 - 0.81 / 0.85 - 0.81	11.0 - 10.0 / 6.2 - 5.2	3360-3420
71	1.0	1.0	3.6 - 3.4 / 1.8 - 1.7	0.89 - 0.83 / 0.89 - 0.83	20.1 - 16.5 / 11.4 - 9.5	3220-3370
80	1.4	1.0	4.1 - 3.9 / 2.0 - 2.0	0.85 - 0.85 / 0.85 - 0.85	27.1 - 23.0 / 13.7 - 12.1	3220-3340
80	1.7	1.0	5.1 - 4.9 / 2.48 - 2.46	0.85 - 0.79 / 0.85 - 0.79	38.9 - 35.3 / 20.8 - 20.0	3380-3430
90	2.3	1.0	6.25 - 5.85 / 3.1 - 2.8	0.88 - 0.85 / 0.88 - 0.85	79.4 - 72.1 / 42.8 - 40.5	3490-3520
90	3.4	1.0	9.8 - 8.9 / 2.98 - 2.85	0.87 - 0.80 / 0.87 - 0.80	58.8 - 66.8 / 32.3 - 33.8	3470-3500
100	5.4	1.0	14.8 - 14.2 / 7.2 - 7.0	0.86 - 0.80 / 0.86 - 0.80	175.2 - 163.2 / 61.8 - 59.2	3520-3530
112	8.4	1.0	21.0 - 20.4 / 10.5 - 10.2	0.86 - 0.76 / 0.86 - 0.76	181.7 - 174.0 / 100.3 - 93.5	3490-3510

3 x 575 V, 60 Hz (supply voltage H)

Frame size	P_2 [Hp]	Service factor	$I_{1/1}$ [A]	Cos $\varphi_{1/1}$	I_{start}	Speed [rpm]
71	0.58	1.0	0.70	0.84	4.6	3340
71	1.0	1.0	1.30	0.84	7.8	3340
80	1.4	1.0	1.55	0.86	11.1	3220
80	1.7	1.0	1.84	0.86	16.8	3360
90	2.0	1.0	2.98	0.89	21.6	3490
90	3.4	1.0	3.50	0.90	27.8	3450
100	5.4	1.0	5.70	0.88	47.9	3500
112	8.4	1.0	8.20	0.87	77.4	3490

Speed-controlled motors

3 x 200-240 V, 50/60 Hz (supply voltage V)

Frame size	P_2 [Hp]	Service factor	Full load amps [A]	Service factor amps [A]
90	2	1.00	5.40 - 4.50	-
100	3	1.15	7.90-6.60	9.10 - 7.60
112	5	1.15	13.2-10.9	14.9 - 12.4
132	7.5	1.15	20.0-16.6	23.0 - 19.3

3 x 440-480 V, 50/60 Hz (supply voltage T)

Frame size	P_2 [Hp]	Service factor	Full load amps [A]	Service factor amps [A]
90	2	1.15	2.65	3.00
90	3	1.15	3.8	4.30
112	5	1.15	6.2-5.8	7.0-6.6
112	7.5	1.15	9.1-8.5	10.4-9.7
132	10	1.15	12.4-11.5	14.2-13.0

1 x 200-240 V, 60 Hz (supply voltage U)

Frame size	P_2 [Hp]	Service factor	Full load amps [A]	Service factor amps [A]
71	0.75	1.00	3.45-2.9	-
80	1.50	1.00	6.70-5.6	-
90	2.00	1.00	9.10-7.6	-

Additional data for speed-controlled motors

Single-phase supply voltage

1 x 200-240 V, 50/60 Hz (supply voltage U)

Recommended fuse size

Motor size [Hp]	Min. [A]	Max. [A]
0.5 - 1.0 Hp	6	10
1.5 - 2.0 Hp	10	16

You can use standard as well as quick-blow or slow-blow fuses.

Leakage current

Earth leakage current less than 3.5 mA, AC.

Earth leakage current less than 10 mA, DC.

The leakage currents are measured in accordance with EN 61800-5-1:2007.

Three-phase supply voltage

3 x 440-480 V, 60 Hz (supply voltage T)

Recommended fuse size

Motor size [Hp]	Min. [A]	Max. [A]
2	6	10
3	6	16
5	13	16
7.5	16	32

3 x 200-240 V, 60 Hz (supply voltage V)

Recommended fuse size

Motor size [Hp]	Min. [A]	Max. [A]
2	10	20
3	13	35
5	25	35
7.5	32	35

You can use standard as well as quick-blow or slow-blow fuses.

Leakage current, AC

Speed [rpm]	Power [Hp]	Mains voltage [V]	Leakage current [mA]
2900-4000	2.0-3.0	≤ 400	< 3.5
		> 400	< 5
	5.0-7.5	≤ 400	< 3.5
		> 400	< 3.5
4000-5900	2.0-3.0	≤ 400	< 3.5
		> 400	< 5
	5.0-7.5	≤ 400	< 3.5
		> 400	< 3.5

The leakage currents are measured in accordance with EN 61800-5-1:2007.

Inputs and outputs

Earth reference, GND

All voltages return to GND.

All currents return to GND.

Absolute maximum voltage and current limits

Exceeding the following electrical limits may result in severely reduced operating reliability and motor life:

Relay 1:

Maximum contact load: 250 VAC, 2 A or 30 VDC, 2 A.

Relay 2:

Maximum contact load: 30 VDC, 2 A.

GENI terminals: -5.5 to 9.0 VDC or less than 25 mADC.

Other input or output terminals: -0.5 to 26 VDC or less than 15 mADC.

Digital inputs, DI

Internal pull-up current greater than 10 mA at V_i equal to 0 VDC.

Internal pull-up to 5 VDC (currentless for V_i greater than 5 VDC).

Low logic level: V_i less than 1.5 VDC.

High logic level: V_i greater than 3.0 VDC.

Hysteresis: No.

Screened cable: 28-16 AWG, 0.5 - 1.5 mm^2.

Maximum cable length: 1640 ft (500 m).

Open-collector digital outputs, OC

Current sinking capability: 75 mADC, no current sourcing.

Load types: Resistive or/and inductive.

Low-state output voltage at 75 mADC: Maximum 1.2 VDC.

Low-state output voltage at 10 mADC: Maximum 0.6 VDC.

Overcurrent protection: Yes.

Screened cable: 28-16 AWG, 0.5 - 1.5 mm^2.

Maximum cable length: 1640 ft (500 m).

Analog inputs, AI

Voltage signal ranges:

- 0.5-3.5 VDC, AL AU
- 0-5 VDC, AU
- 0-10 VDC, AU.

Voltage signal: R_i greater than 100 kΩ at 75 °F (25 °C).

Leak currents may occur at high operating temperatures. Keep the source impedance low.

Current signal ranges:

- 0-20 mADC, AU
- 4-20 mADC, AL AU.

Current signal: R_i equal to 292 Ω.

Current overload protection: Yes. Change to voltage signal.

Measurement tolerance:
0-3 % of full scale (maximum-point coverage).

Screened cable: 28-16 AWG, 0.5 - 1.5 mm^2.

Maximum cable length:
1640 ft (500 m) (excl. potentiometer).

Potentiometer connected to +5 V, GND, any AI:

Use maximum 10 kΩ.

Maximum cable length: 328 ft (100 m).

Analog output, AO

Current sourcing capability only.

Voltage signal:

- Range: 0-10 VDC
- minimum load between AO and GND: 1 kΩ
- short circuit protection: Yes.

Current signal:

- Ranges: 0-20 and 4-20 mADC
- maximum load between AO and GND: 500 Ω
- open-circuit protection: Yes.

Tolerance: 0-4 % of full scale (maximum-point coverage).

Screened cable: 28-16 AWG, 0.5 - 1.5 mm^2.

Maximum cable length: 1640 ft (500 m).

Pt100/1000 inputs, PT

Temperature range:

- Minimum -22 °F (-30 °C). 88 Ω / 882 Ω
- maximum 356 °F (180 °C). 168 Ω / 1685 Ω.

Measurement tolerance: ± 2.5 °F (1.5 °C).

Measurement resolution: < 0.5 °F (0.3 °C).

Automatic range detection, Pt100 or Pt1000: Yes.

Sensor fault alarm: Yes.

Screened cable: 28-16 AWG, 0.5 - 1.5 mm^2.

Use Pt100 for short wires.

Use Pt1000 for long wires.

LiqTec sensor inputs*

Use Grundfos LiqTec sensor only.

Screened cable: 28-16 AWG, 0.5 - 1.5 mm^2.

Grundfos Digital Sensor input and output, GDS*

Use Grundfos Digital Sensor only.

* Only applicable for TPE, TPED Series 2000 and TPE3, TPE3 D pumps.

Power supply

+5 V:

- Output voltage: 5 VDC - 5 %/+ 5 %
- maximum current: 50 mADC, sourcing only
- overload protection: Yes.

+24 V:

- Output voltage: 24 VDC - 5 %/+ 5 %
- maximum current: 60 mADC, sourcing only
- overload protection: Yes.

Digital outputs, relays

Potential-free changeover contacts.

Minimum contact load when in use: 5 VDC, 10 mA.

Screened cable: 28-12 AWG, 0.5-2.5 mm^2.

Maximum cable length: 500 m.

Bus input

Grundfos GENIbus protocol, RS-485.

Screened 3-core cable: 28-16 AWG, 0.5 - 1.5 mm^2.

Maximum cable length: 1640 ft (500 m).

EMC (electromagnetic compatibility)

Standard used: EN 61800-3.

The table below indicates the emission category of the motor.

C1: Fulfills the requirements for residential areas.

C3: Fulfills the requirements for industrial areas.

Motor [Hp]	Emission category	
	1450-2000 rpm	2900-4000 rpm 4000-5900 rpm
0.75	C1	C1
1.5	C1	C1
2.0	C1	C1
3.0	C1	C1
5.0	C1	C1
7.5	C3/C1*	C1

* C1, if equipped with an external Grundfos EMC filter.

Immunity: Fulfills the requirements for industrial areas.

Contact Grundfos for further information.

Enclosure class

Standard: IP55 (IEC 34-5).

Optional: IP66 (IEC 34-5).

Insulation class

F (IEC 85).

Standby power consumption

5-10 W.

Cable entries

Motor [Hp]	Supply voltage	Number and size of cable entries
0.75 - 2	1 x 200-240 V, 50/60 Hz (supply voltage U)	4 x NPT 1/2"
	3 x 200-240 V, 60 Hz (supply voltage V)	4 x NPT 1/2"
	3 x 440-480 V, 50/60 Hz (supply voltage T)	4 x NPT 1/2"
3	3 x 200-240 V, 60 Hz (supply voltage V)	5 x NPT 1/2"
	3 x 440-480 V, 50/60 Hz (supply voltage T)	4 x NPT 1/2"
5	3 x 200-240 V, 60 Hz (supply voltage V)	5 x NPT 1/2"
	3 x 440-480 V, 50/60 Hz (supply voltage T)	5 x NPT 1/2"
7.5	3 x 200-240 V, 60 Hz (supply voltage V)	1 x NPT 3/4" + 5 x NPT 1/2"
	3 x 440-480 V, 50/60 Hz (supply voltage T)	5 x NPT 1/2"
10	3 x 440-480 V, 50/60 Hz (supply voltage T)	1 x NPT 3/4" + 5 x NPT 1/2"

Torques

Terminal	Thread size	Maximum torque [ft lb]
L1, L2, L3, L, N	M4	1.33
NC, C1, C2, NO	M2.5	0.37
1-26 and A, Y, B	M2	0.37

Sound pressure level

Motor [Hp]	Maximum speed stated on nameplate [rpm]	Speed [rpm]	Sound pressure level ISO 3743 [dB(A)] 1-phase motors	Sound pressure level ISO 3743 [dB(A)] 3-phase motors
0.75	2000	1500	38	38
		2000	42	42
	4000	3000	53	53
		4000	58	58
	5900	4000	58	58
		5900	68	68
1.5	2000	1500		38
		2000		42
	4000	3000	53	53
		4000	58	58
	5900	4000	58	58
		5900	68	68
2.0	2000	1500		39
		2000		46
	4000	3000	57	57
		4000	64	64
	5900	4000	58	58
		5900	68	68
3.0	2000	1500		47
		2000		
	4000	3000		57
		4000		64
	5900	4000		58
		5900		68
5.0	2000	1500		48
		2000		55
	4000	3000		60
		4000		67
	5900	4000		63
		5900		73
7.5	2000	1500		54
		2000		60
	4000	3000		60
		4000		68
	5900	4000		63
		5900		73

The grey fields indicate that the motor is not available in this MLE motor range.

17. Customization

Although the Grundfos CM and CME product range offers a number of pumps for different applications, customers require specific pump solutions to satisfy their needs. Below are the options available for customizing the CM and CME pumps. Contact Grundfos for further information or for requests other than the ones mentioned below.

Motors

Motor with anti-condensation heater

CM

TM03 2440 4305

Fig. 38 Mains-operated motor with anti-condensation heater

In applications where condensation in the motor may occur, we recommend that you install a motor with an anti-condensation heater on the stator coil ends. The heater keeps the motor temperature higher than the ambient temperature and prevents condensation.

In areas with ambient temperatures below 32 °F (0 °C), we recommend that you always use motors with an anti-condensation heater.

High humidity may cause condensation in the motor. Slow condensation occurs as a result of a decreasing ambient temperature; rapid condensation occurs as a result of shock cooling caused by direct sunlight followed by rain.

Note: Rapid condensation is not to be confused with the phenomenon which occurs when the pressure inside the motor is lower than the atmospheric pressure. In such cases, moisture is sucked from the atmosphere into the motor through bearings and housings, etc.

In applications with constant humidity levels above 85 %, the drain holes in the drive-end flange must be open. This changes the enclosure class to IPX5. If IP55 protection is required due to operation in dusty environments, we recommend that you install a motor with an anti-condensation heater.

Figure 39 shows a typical circuit of a three-phase motor with anti-condensation heater.

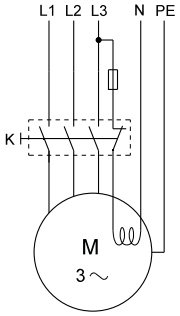

TM03 4058 1406

Fig. 39 Three-phase motor with anti-condensation heater

Legend

Symbol	Designation
K	Contactor
M	Motor

Note: Connect the anti-condensation heater to the power supply so that it is on when the motor is switched off.

The following motor sizes are available with an anti-condensation heater:

Motors, 50/60 Hz	Power of heating unit [W]	
Frame size	1 x 24 V	1 x 190-250 V
71/80	38	23
90		31
100		38
112	2 x 38	2 x 38

CME

The MLE motors fitted to CME pumps incorporate a standstill heating function. No external heater on the stator coil is necessary.

The working principle is that AC voltage is applied to the motor windings. The applied AC voltage will not make the motor run, but will ensure that sufficient heat is generated to prevent condensation in the motor. The terminal box is kept warm and dry by the heat generated via the mains voltage connected. However, it is a condition that the terminal box is not exposed to open air. It must be equipped with a suitable cover to protect it from rain, and the drain plugs must be removed to obtain ventilation in motor and terminal box. See *Operation in condensing environments* on page 21.

Motors with PTC sensors

TM02 7038 2403

Fig. 40 PTC sensor incorporated in windings

Built-in PTC sensors (thermistors) protect the motor against overheating. Single-phase motors are protected against slow and rapid overheating. Three-phase motors are protected against slow overheating.

We offer built-in PTC sensors to protect the motor.

Three-phase mains-operated motors with supply voltages F, G and O of 5 Hp and up have PTC sensors as standard (UL-approved motors have no internal protection).

Note: PTC sensors must be connected to an external tripping unit connected to the control circuit.

Protection according to IEC 60034-11:

- slow and rapid overheating.

PTC sensors comply with DIN 44082. Maximum voltage at the terminals, U_{max} = 2.5 VDC. All tripping units available for DIN 44082 PTC sensors meet this requirement.

Figure 41 shows a typical circuit of a three-phase motor with PTC sensors.

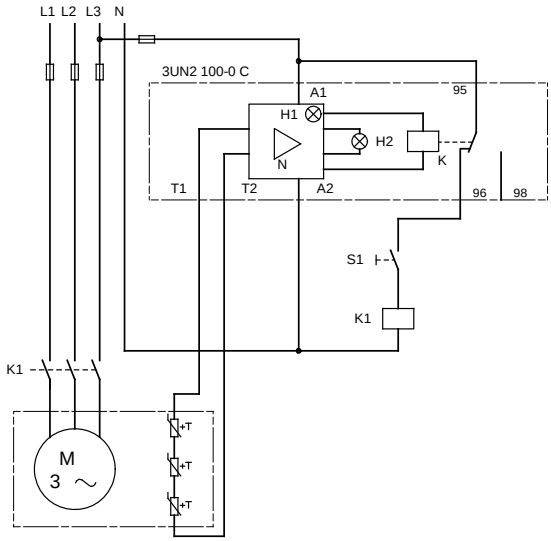

TM00 3965 1494

Fig. 41 Three-phase motor with PTC sensors

Legend

Symbol	Designation
S1	On/off switch
K1	Contactor
+T	PTC sensor (thermistor) in motor
M	Motor
3UN2 100-0 C	Tripping unit with automatic resetting
N	Amplifier
K	Output relay
H1	LED "Ready"
H2	LED "Tripped"
A1, A2	Connection for control voltage
T1, T2	Connection for PTC sensor loop

Motors with thermal switches (PTO)

TM02 7042 2403

Fig. 42 Thermal switch incorporated in windings

Built-in thermal switches protect the motor against overheating. Single-phase motors are protected against slow and rapid overheating. Three-phase motors are protected against slow overheating.

We offer mains-operated motors with bimetallic thermal switches in the motor windings.

Three-phase mains-operated motors with supply voltages F, G and O are available with built-in thermal switches.

Note: Thermal switches must be connected to an external control circuit to protect the motor against slow overheating. The thermal switches require no tripping unit.

Protection according to IEC 60034-11:

- slow and rapid overheating.

As protection against seizure, the motor must be connected to a motor-protective circuit breaker.

Thermal switches tolerate the following maximum loads:

U_{max}	250 VAC
I_N	1.5 A
I_{max}	5.0 A (locked-rotor and breaking current)

Figure 43 shows a typical circuit of a three-phase motor with built-in bimetallic thermal switches.

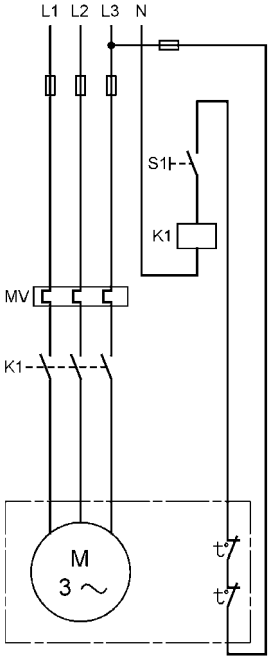

TM00 3964 1494

Fig. 43 Three-phase motor with thermal switches

Legend

Symbol	Designation
S1	On/off switch
K1	Contactor
t°	Thermal switch in motor
M	Motor
MV	Motor-protective circuit breaker

Under- and over-size motors

The available motor sizes are shown in the *16. Motor data* section beginning on page 78.

Undersize and oversize motors are defined as the next horsepower size below or above the fitted standard motor.

Note: The CM 1, 3 and 5 cannot be combined with frame sizes 112 and 132.

We recommend that you use an oversize motor if the operating conditions fall outside the standard conditions.

We especially recommend oversize motors in these cases:

- The pump is installed at an altitude of more than 3,280 ft (1000 m) above sea level.
- The viscosity or density of the pumped liquid is higher than that of water.
- The ambient temperature exceeds +104 °F (+40 °C) (CME).
- The ambient temperature exceeds +131 °F (+55 °C) (CM).

We recommend that you use an undersize motor if the operating conditions do not at all reach the standard conditions.

Undersize motors can be used in these cases:

- The viscosity or density of the pumped liquid is lower than that of water.
- The duty point of the pump is constant, and the flow rate is significantly lower than the recommended maximum flow rate.

The duty point of the pump is constant, and the flow rate is significantly lower than the recommended maximum flow rate.

Terminal box positions

As standard the terminal box is mounted in 12 o'clock position as shown in fig. 44.

CM pumps with motor frame sizes of 71 and 80 are available with other terminal box positions on special request.

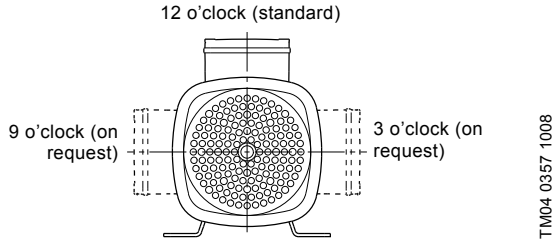

Fig. 44 Terminal box positions of frame sizes 71 and 80

Standstill heating function

The MLE motors fitted to CME pumps incorporate a standstill heating function. No external heater on the stator coil is necessary.

The working principle is that AC voltage is applied to the motor windings. The applied AC voltage will not make the motor run, but will ensure that sufficient heat is generated to prevent condensation in the motor. The terminal box is kept warm and dry by the heat generated via the power supply voltage connected. However, it is a condition that the terminal box is not exposed to open air. It must be provided with a suitable cover to protect it from rain and the drain plugs have to be removed to obtain ventilation in motor and terminal box. See *Operation in condensing environments* on page 21.

Functional modules for CME pumps

CME pumps offer a number of advantages, depending on hardware combinations and software configuration of the motor. For example, various functional modules are available.

New-generation CME 0.75-7.5 Hp (supply voltages T, U, V)

As standard, these CME pumps are fitted with the advanced functional module FM 300.

Advanced functional module (FM 300)

The advanced module has a number of inputs and outputs enabling the motor to be used in advanced applications where many inputs and outputs are required.

The advanced module has these connections:

- three analog inputs
- one analog output
- two dedicated digital inputs
- two configurable digital inputs or open-collector outputs
- Grundfos Digital Sensor input and output
- two Pt100/1000 inputs
- LiqTec sensor inputs
- two signal relay outputs
- GENIbus connection.

Pumping of liquids down to -22 °F (-30 °C)

We offer custom-built pumps for the pumping of liquids down to -22 °F (-30 °C). The pumps have an oversize neck ring ensuring that impellers do not seize up as a result of thermal expansion.

We offer the above solution for CM and CME in I and G versions (stainless steel).

Alternative connection positions

The pump is available with various connection positions on special request. See fig. 45.

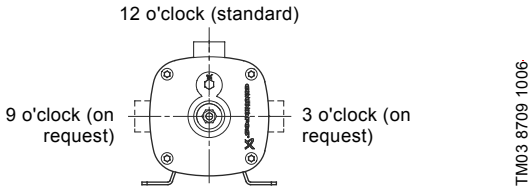

Fig. 45 Alternative connection positions as seen from pump inlet side

Note: On CM 1, 3 and 5 pumps fitted with motor frame sizes 71 and 80, the outlet can be positioned according to the customer's request. All other pump types cannot be factory-tested if they are ordered with non-standard outlet positions.

Surface treatments

Cleaned and dried pumps

We recommend that you use cleaned and dried pumps in applications involving strict demands on cleanliness and surface quality, such as low content of silicone. Prior to assembly, all pump parts are cleaned in +140 °F to +158 °F (+60 to +70 °C) water with a cleaning agent. All pump parts are then thoroughly rinsed in de-ionized water and air-dried. The pump is assembled without any use of silicone lubricants. Finally, the pump is packed in silicone-free plastic.

Cleaned and dried pumps are not performance-tested.

Electro-polished pumps

Electro-polished pumps are often used in the pharmaceutical industry and in the food and beverage industry where materials and surface quality must meet strict requirements to hygiene or corrosion resistance.

Electro-polishing removes burrs as well as metallic and non-metallic inclusions, providing a smooth, clean and corrosion-resistant stainless-steel surface.

First, all components are pickled in a mixture of nitric and hydrofluoric acid. Subsequently, the components are electro-polished in a mixture of sulphuric and phosphoric acid. Finally, the components are passivated in nitric acid.

All cast parts are polished mechanically before being electro-polished.

To meet the strict hygienic requirements to material and surface quality, we offer electro-polished stainless-steel pumps with the following surface quality:

Surface quality: Ra ≤ 0,8 µm.

Alternative coloring

All pump types and sizes are available with alternative coloring. We offer custom-built pumps in any NCS- or RAL-specified color to suit your requirements!

The paint used is water-based. Painted parts correspond to corrosion class III.

Alternative pipe connections

A wide range of pipe connections are available for the CM and CME pumps:

- Tri-Clamp®
- DIN, JIS, ANSI flange (combination flange)
- Victaulic® coupling
- Whitworth thread Rp
- internal NPT thread.

The available pipe connections are shown in fig. 46.

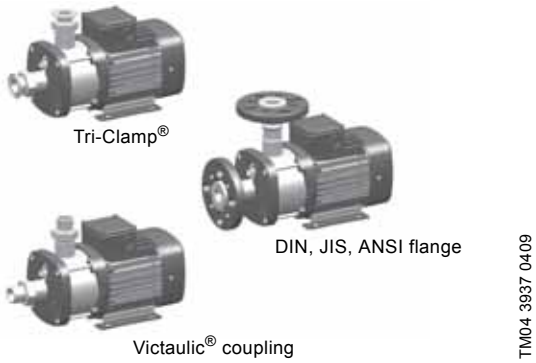

Fig. 46 Examples of pipe connections

18. Advanced use of CME pumps

Introduction

Grundfos CME pumps have many features for the advanced user.

Grundfos MLE motors have features such as standstill heating, stop function, and signal relays. These features give a unique opportunity to customize the CME pump.

The PC Tool E-products gives access to most of the settings available in the products, as well as the possibility of logging and viewing data.

These features are described below.

Standstill heating

Standstill heating is a feature ensuring that even during standstill periods the motor windings have a certain minimum temperature.

Purpose and benefits

The purpose of this function is to make the MLE motor more suitable for outdoor installation. During standstill periods, there is a need to keep the motor temperature higher than the ambient temperature to avoid condensation in and on the motor.

Traditionally this issue has been solved by using an anti-condensation heater on the stator coil heads. Now Grundfos provides this feature by means of a special function within the MLE motor and terminal box.

The MLE motor has standstill heating included. An external heater on the stator coil is not necessary.

Applications

This function is especially suitable in outdoor applications and at installation sites with fluctuating temperatures.

Description

The working principle is that AC voltage is applied to the motor windings. The applied AC voltage will ensure that sufficient heat is generated to avoid condensation in the motor. The terminal box is kept warm and dry by the heat generated via the power supply. However, it is a condition that the terminal box is not exposed to open air. It must be provided with a suitable cover to protect it from rain.

Stop function

The stop function ensures that the pump is stopped at low or no flow. The function is also called low-flow stop function.

Purpose and benefits

The purpose of the stop function is to stop the pump when low flow is detected.

The stop function provides these benefits:

- The energy consumption is optimized and the system efficiency is improved.
- Unnecessary heating of the pumped liquid which damages pumps.
- Wear of the shaft seals is reduced.
- Noise from operation is reduced.

Applications

The stop function is used in systems with periodically low or no consumption thus preventing the pump from running against closed valve.

Operating conditions for the stop function

A pressure sensor, a non-return valve, and a diaphragm tank are required for the stop function to operate properly.

Note: The non-return valve must always be installed before the pressure sensor. See fig. 47 and fig. 48.

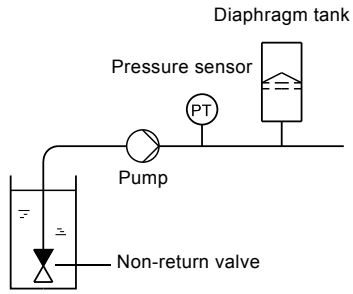

Fig. 47 Position of the non-return valve and pressure sensor in system with suction lift operation

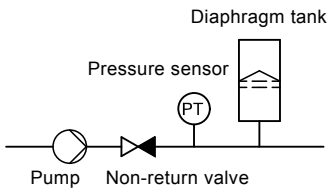

Fig. 48 Position of the non-return valve and pressure sensor in system with positive inlet pressure

When low flow is detected, the pump is in on/off operation. If there is flow, the pump will continue operating according to the setpoint. See fig. 49.

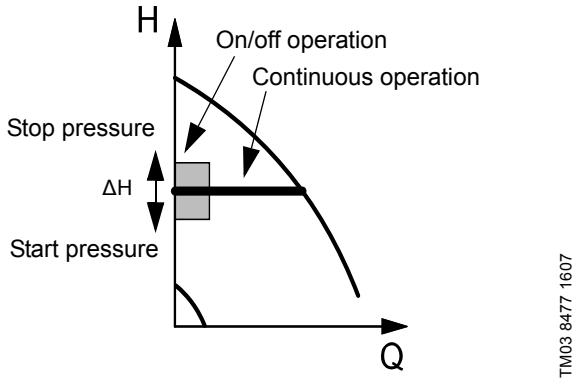

Fig. 49 Constant pressure with stop function. Difference between start and stop pressures (ΔH)

Diaphragm tank

The stop function requires a diaphragm tank of a certain minimum size. The tank must be installed near the outlet of the pump, and the precharge air pressure must be 0.7 x setpoint.

Recommended diaphragm tank size:

CME	Tank size [gal (liter)]
CME 1	1/4 (1)
CME 3, CME 5	1/2 (2)
CME 10	2 (8)
CME 15, CME 25	4.5 (17)

If a diaphragm tank of the above size is installed in the system, no additional adjustment should be necessary. If the tank installed is too small, the pump will start and stop often. Tank size will influence at which flow rate the system will go into start/stop operation.

Description

The low-flow stop function can operate in two different ways:

- by means of an integrated "low-flow detection function"
- by means of an external flow switch connected to the digital input.

Low-flow detection function

- The low-flow detection function will check the flow regularly by reducing the speed for a short time. A small change in pressure or no change in pressure means that there is low flow.

Low-flow detection with flow switch

- When a flow switch detects low flow, the digital input will be activated.

Contact Grundfos for further information.

Dry-running protection

This function protects the pump against dry running. When lack of inlet pressure or water shortage is detected, the pump will be stopped before being damaged.

Lack of inlet pressure or water shortage can be detected with a switch connected to a digital input configured to dry-running protection.

The use of a digital input requires an accessory, such as:

- a Grundfos Liqtec® dry-running switch (for more information on LiqTec, see section *19. Accessories*)
- a pressure switch installed on the inlet side of the pump
- a float switch installed on the inlet side of the pump.

The pump cannot restart as long as the digital input is activated.

Signal relay

A signal relay is used to give an output indication of the current operational status of the CME pump. The signal relay is a potential free contact (also called a dry contact). The output signals are typically transmitted to external control systems.

Purpose and benefits

- The signal relays can be set to indicate several types of operational status.

Applications

Signal relays can be used in all applications involving a need to read out the operational status to e.g. a control room or to a superior control system.

Relay control

The relay time is 0 seconds.

The relay is controlled by the variable frequency drive software according to the setup of the relay [Ready, Fault, Operation].

19. Accessories

Pipe connections

Flange sets for CM, CME (DIN/ANSI/JIS)

All materials in contact with the pumped liquids are made of stainless steel AISI 316 / EN 1.4408.
The pipe stub is made of stainless steel AISI 316 / EN 1.4408 and the flange part is made of cast iron EN-GJL-200.

Flange	Pump type	Pipe connection	Pump thread	L* [inches (mm)] Flange mounted on pump inlet	L* [inches (mm)] Flange mounted on pump outlet	Product number
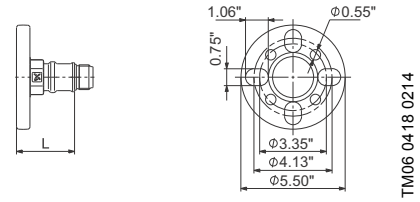	CM 1 CM 3	1 1/4" ANSI 300 lb.	NPT	1.93 (49.03)	3.07 (77.98)	96904705
	CM 5					96904708
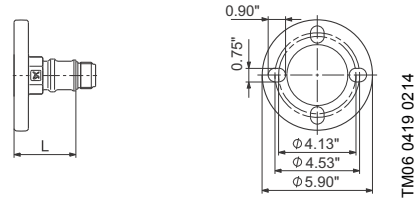	CM 10	1 1/2" ANSI 300 lb.	NPT	1.73 (43.95)	2.68 (68.08)	96904711
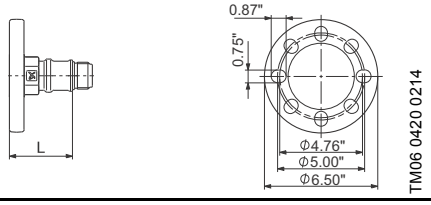	CM 15 CM 25	2" ANSI 300 lb.	NPT	1.89 (48.01)	2.68 (68.08)	96904714

* Length from outer edge of flange to pump inlet or outlet port.

Note: Please pay attention to the compatibility between pump and flange before ordering. See tables below.

CM pumps compatible with ANSI flanges

Pump type	Material version	ML 71/80 1-ph	ML 71/80 3-ph	ML 90 1-ph	ML 90 3-ph	ML 100	ML 112
CM 1, 3, 5	Cast iron		●	●	●		
	Stainless steel	●	●		●	●	
CM 10, 15, 25	Cast iron	●	●	●	●	●	●
	Stainless steel	●	●	●	●	●	●

CME pumps compatible with ANSI flanges

Pump type	Material version	Supply voltages Q			Supply voltages T, U	
		MLE 90S	MLE 90L	MLE 112	MLE 71/80	MLE 90
CME 1, 3, 5	Cast iron	● *	●			
	Stainless steel		●			
CME 10, 15, 25	Cast iron		●	●	●	●
	Stainless steel		●	●	●	●

* Only 0.35 inches (9 mm) clearance between flange and terminal box.

PJE connection adapter sets for CM, CME

PJE connection	Pump type	Pump thread	D [in. (mm)]	L* [in. (mm)]	Product number
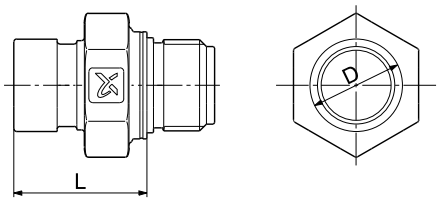 TM03 3865 0309	CM 1 CM 3	1" x 1" NPT	1.33 (33.7)	1.90 (48.5)	96904706
	CM 5	1.25" x 1" NPT	1.67 (42.4)	1.90 (48.5)	96904709
	CM 10	1.5" x 1.5" NPT	1.90 (48.3)	1.90 (48.5)	96904712
	CM 15 CM 25	2" x 2" NPT	2.37 (60.3)	1.97 (50.1)	96904715

* Length from outer edge of PJE connection to pump inlet or outlet port.

PJE connector adapter sets consist of two (2) PJE connection adapters, two (2) EPDM O-rings, and two (2) FKM O-rings.

PJE coupling sets for CM, CME

Parts in contact with the pumped liquid are made of stainless steel, AISI 316 / EN 1.4401, and rubber.

Coupling and pipe stub	Pump type	Pipe stub	PN	Pipe connection	Rubber parts	Number of coupling sets required	Product number
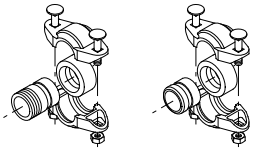 TM00 3808 1094	CM, CME 15 CM, CME 25	Threaded	1015 psi (70 bar)	2" NPT	EPDM	2	331301
					FKM	2	0ID00128
		For welding	1015 psi (70 bar)	DN 50	EPDM	2	00339910
					FKM	2	00339917

A PJE coupling set consists of two coupling halves (Victaulic, type 77), one gasket, one pipe stub (for welding or threaded), bolts and nuts.

Tri-Clamp® connections for CM, CME

Tri-Clamp®	Pump type	Pump thread	Tri-Clamp®	D [in. (mm)]	L* [in. (mm)]	Product number
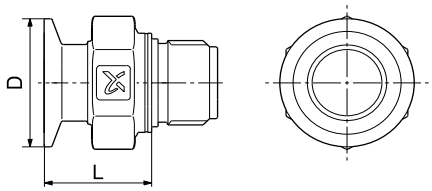	CM 1 CM 3	NPT	1.5"	2.0 (50.4)	1.6 (40.3)	96904707
	CM 5	NPT	1.5"	2.0 (50.4)	1.4 (35.3)	96904710
	CM 10	NPT	1.5"	2.0 (50.4)	1.5 (37.4)	96904713
	CM 15 CM 25	NPT	2"	2.5 (63.9)	1.5 (37.4)	96904716

TM04 3866 0309

* Length from outer edge of Tri-Clamp® connection to pump inlet or outlet port.

Clamping ring, pipe stub and gasket for Tri-Clamp® connections

		Clamping ring		Pipe stub				Gasket	
		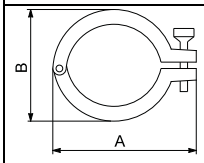 TM03 4645 2406		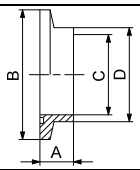 TM03 4646 2406				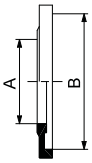 TM03 4647 2406	
Pump type	**Nominal diameter [mm]**	**A [in. (mm)]**	**B [in. (mm)]**	**A [in. (mm)]**	**B [in. (mm)]**	**C [in. (mm)]**	**D [in. (mm)]**	**A [in. (mm)]**	**B [in. (mm)]**
CM, CME 1, 3, 5, 10	1.5 (38.0)	3.7 (92.0)	2.4 (59.5)	0.9 (21.5)	2.9 (50.5)	1.4 (35.6)	1.6 (38.6)	1.4 (35.3)	2.0 (50.5)
CM, CME 15, 25	2.0 (51.0)	4.1 (104.4)	3.0 (74.0)	0.9 (21.5)	2.6 (64.0)	2.0 (48.6)	2.1 (51.6)	1.9 (48.0)	2.6 (64.0)

The clamping ring is made of stainless steel, AISI 304 /EN 1.4301.

The pipe stub is made of stainless steel, AISI 316 / EN 1.4401.

The gasket is made of PTFE or EPDM.

Pump type	Pipe connection	Connection material	Gasket	Pressure [psi (bar)]	Number of coupling sets required	Product number
CM, CME 1, 3, 5, 10	DN 32	Stainless steel	EPDM	232 (16)	2	96515374
			PTFE		2	96515375
CM, CME 15, 25	DN 50		EPDM		2	96515376
			PTFE		2	96515377

Potentiometer for CME

The potentiometer is for setpoint setting and start/stop of the CME pump.

Product	Product number
External potentiometer with cabinet for wall mounting	625468

Communication interface modules (CIM)

For CME

TM05 7508 1113

Fig. 50 Grundfos CIM modules

A CIM module is an add-on communication interface module for MLE motors. The CIM module enables data transmission between the pump and an external system, for example a BMS (building management system) or SCADA system.

We offer the following CIM modules:

Description	Fieldbus protocol	Product number
CIM 050	GENIbus	96824631
CIM 100	LonWorks	96824797
CIM 150	PROFIBUS DP	96824793
CIM 200	Modbus RTU	96824796
CIM 250*	GSM/GPRS	96824795
CIM 270*	GRM	96898815
CIM 300	BACnet MS/TP	96893770
CIM 500	BACnet IP	98301408
CIM 500	Modbus TCP	
CIM 500	PROFINET	

* Antenna not included. See below.

Antennas for CIM 250 and 270

Description	Product number
Antenna for roof	97631956
Antenna for desk	97631957

Grundfos GO

Grundfos GO is used for wireless infrared or radio communication with the pumps.

Various Grundfos GO variants are available. The variants are described below.

MI 204

The MI 204 is an add-on module with built-in infrared and radio communication. The MI 204 can be used in conjunction with an iPhone or iPod with lightning connector, e.g. fifth generation iPhone or iPod.

(The MI 204 is also available together with an iPod touch and a cover.)

MI 204

TM05 7704 1513

Fig. 51 MI 204

Supplied with the product:

- Grundfos 204
- sleeve
- quick guide
- charger cable.

MI 301

The MI 301 is a module with built-in infrared and radio communication. The MI 301 must be used in conjunction with an Android or iOS-based smart device with a Bluetooth connection. The MI 301 has a rechargeable Li-ion battery and must be charged separately.

TM05 3890 1712

Fig. 52 MI 301

Supplied with the product:

- Grundfos MI 301
- battery charger
- quick guide.

Product numbers

Grundfos GO Remote variant	Product number
Grundfos MI 204	98424092
Grundfos MI 204 including iPod touch	98612711
Grundfos MI 301	98046408

LiqTec

Description

LiqTec features:

- Protects the pump against dry-running.
- Protects the pump against too high liquid temperature (+266 °F ± 9 °F (130 °C ± 5 °C)).
- Has a fail-safe design. If the sensor, sensor cable, electronic unit or power supply fails, the pump stops immediately.
- The LiqTec is **not** to be used with the MGFlex motor.

Mounting the LiqTec sensor

The LiqTec can be fitted to a DIN rail to be incorporated in a control cabinet.

Electrical connection

Example of electrical connection, see page 96.

Calibration of sensor and controller

Follow the procedure on the next page.

Functions

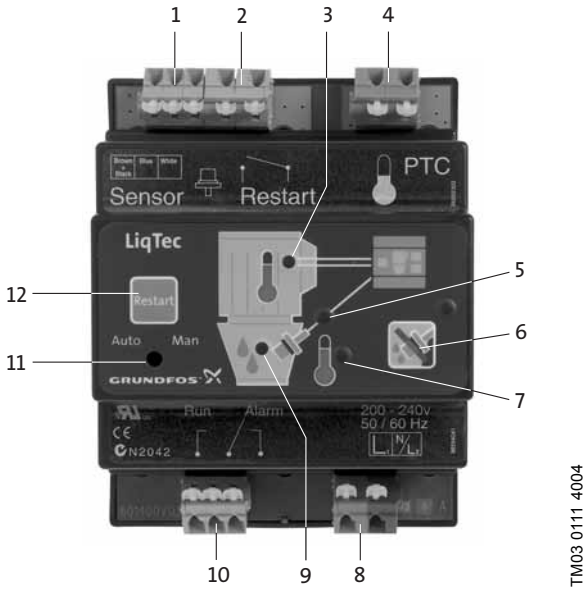

Fig. 53 LiqTec functions

1. Connection for dry-running sensor
2. Connection for external restarting
3. **Motor PTC**
   Green light indicates OK or short-circuited terminals. Red light indicates too high motor temperature. The alarm relay is activated.
4. **Connection for PTC sensor**
   This input is not used in connection with E-pumps as the variable frequency drive protects the motor against overload.
5. **Sensor indicator light**
   Red light indicates defective sensor or cable. The alarm relay is activated.
6. **Deactivation of the dry-running monitoring function**
   Press the button to deactivate the dry-running monitoring function. Red flashing light. The PTC monitoring function is still active. Press [Restart] to reactivate the dry-running monitoring function.
7. **High liquid temperature indicator light**
   Red light indicates too high liquid temperature (+266 °F ± 9 °F (130 °C ± 5 °C)). The alarm relay is activated.
8. **Supply voltage**
   200-240 VAC, 50/60 Hz and 80-130 VAC 50/60 Hz.
9. **Dry-running indicator light**
   Green light indicates OK (liquid in pump). Red light indicates dry running (no liquid in pump). The alarm relay is activated.
10. **Alarm/Run relay output**
    Potential-free changeover contact. Maximum contact load: 250 V, 1 A, AC (inductive load).
11. **Auto/Man**
    Changeover between automatic and manual restarting. The default setting is "Man". Changeover is carried out by means of a small screwdriver. When "Auto" has been selected, the alarm indication will automatically be reset 10 to 20 seconds after detection of liquid.
12. **Restart**
    Press [Restart] to restart the pump. The button has no influence on the PTC monitoring.

Calibration of sensor and controller

Step	Action	Result
1	Connect the sensor to pos. 1 on Controller and connect the power supply to pos. 8 on the Controller. See page 96.	
2	Submerge the sensor into the pumped liquid. The pumped liquid and the air temperature are to be +70 °F (21 °C). **Note:** It is important that the pumped liquid is stagnant as the calibration will be misleading if the sensor is cooled by flowing water.	
3	Press the buttons at pos. 6 and pos. 12 on the Controller for approximately 20 seconds.	All red indicator lights (except pos. 7) start flashing.
4	When the green indicator lights at pos. 3 and pos. 9 on the Controller are constantly on, release the buttons at pos. 6 and pos. 12.	The calibration is completed.

Further information

Information related to IEC 60730-1:

- Software class A
- Pollution degree 2
- Type 1.

The LiqTec has been cURus-approved according to UL 508.

Maximum pressure: 580 psi (40 bar).

Maximum liquid temperature:
(+266 °F ± 9 °F (130 °C ± 5 °C)).

Maximum ambient temperature: +131 °F (+55 °C).

Power consumption: 5 Watt.

Enclosure class: IPX0.

Maximum cable length: 65.6 ft (20 m).

Standard cable: 16.4 ft (5 m).

Extension cable: 49.2 ft (15 m).

Note:

The LiqTec is not be connected to the PTC sensor. Assemble a jumper wire between the two terminals at pos. 4 on the Controller.

The MLE motor software provides protection against high motor temperature.

The LiqTec is designed for DIN rail mounting in a control cabinet.

Dry-running protection	Single-phase power supply	LiqTec	Sensor 1/2"	Cable 16.4 ft (5 m)	Extension cable 49.2 ft (15 m)	Product number
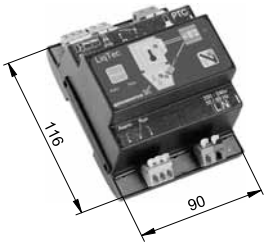	200-240 VAC	•	•	•	-	96556429
	80-130 VAC	•	•	•	-	96556430
	-	-	-	-	•	96443676
	-	-	•	•	-	96556427

TM02 1731 2001

Connection of E-pump to LiqTec

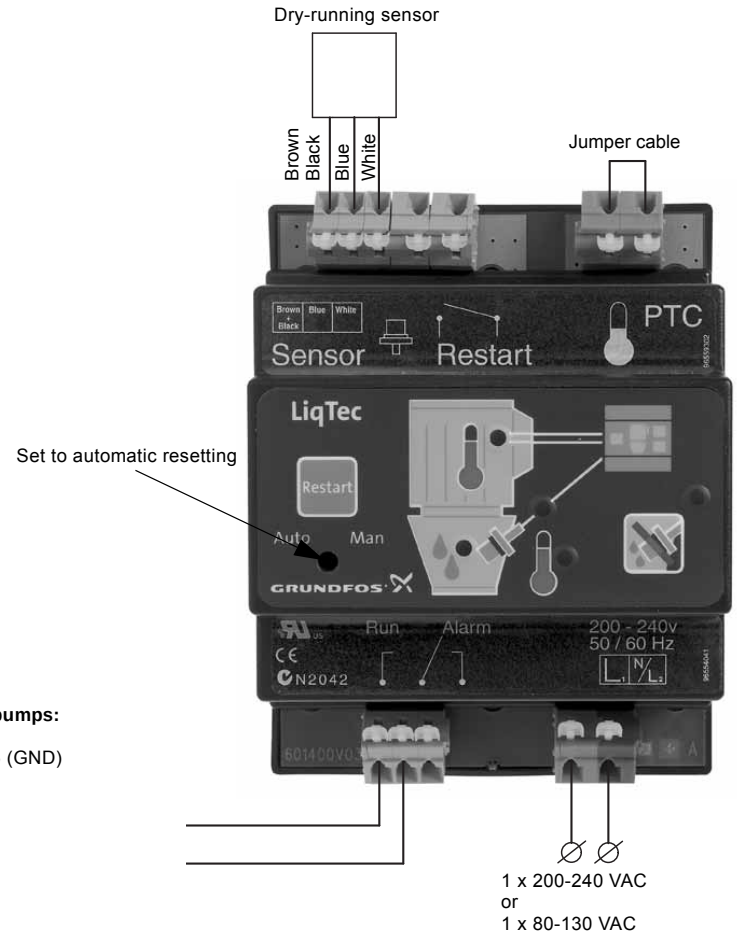

Connection terminals on E-pumps:
Supply voltage T, U, V
Terminals: 2 (Start/Stop) and 6 (GND)

Fig. 54 Connection of E-pump to LiqTec

Setting the digital input

The digital input must be set to "External fault" via the Grundfos GO Remote.

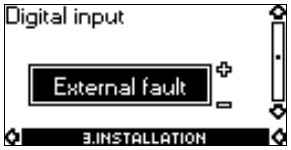

Note: After dry-running fault, the E-pump must be restarted manually.

Disposal

This product or parts of it must be disposed of in an environmentally sound way:

1. Use the public or private waste collection service.
2. If this is not possible, contact the nearest Grundfos company or service workshop.

Grundfos pressure sensor

TM04 7865 2510

Accessory	Supplier	Type	Pressure range [psi (bar)]	Product number EPDM	Product number FKM
Pressure sensors	Grundfos	RPI	0-87 (0-6)	97748922	97748953
Pressure transmitter with 6 ft (1.8 m) screened cable			0-145 (0-10)	97748923	97748954
			0-232 (0-16)	97748924	97748955
Connection: 1/4" - 18 NPT			0-362 (0-25)	97748925	97748956

Technical data

Pressure sensor				
Product number	97748922 97748953	97748923 97748954	97748924 97748955	97748925 97748956
Pressure range [psi (bar)]	0-87 (0-6)	0-145 (0-10)	0-232 (0-16)	0-362 (0-25)
Max. operating pressure [psi (bar)]	870 (60)			
Supply voltage	12.5-30 VDC			
Output signal [mA]	4-20			
Load Impedance	60 Ω at 12.5 VDC			
	100 Ω at 13.3 V			
	Max 900 Ω at 30 VDC			
Response time	100 ms typical 50 ms			
Resolution Accuracy	1/1000 FS			
	+32 to +176 °F +/- 2.0 % FS			
	-22 to +212 °F +/-2.5 % FS			
Operation temperature	-22 to +212 °F (-30 to +100 °C)			
Ambient temperature	-13 to +140 °F (-25 to 60 °C)			
Wetted parts, material	AISI 316 L / ENG 1.4401			
Housing material	AISI 316 L / ENG 1.4401			
Enclosure	IP 67			
Weight [lb (kg)]	0.3 (14)			
EMC -	EN 61326-1			
Pressure - mechanical connection	Adaptor solution for 1/2" and 1/4" NPT			
Markings	CE		C US	

Dimensions

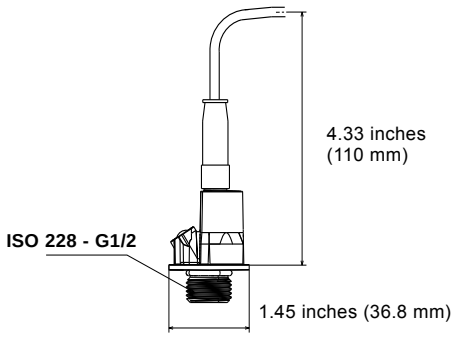

TM04 9237 1612

Fig. 55 Dimensions RPI transmitter

Pressure sensor

Accessory	Supplier	Type	Pressure range [psi (bar)]	Product number
Pressure sensors Pressure Transmitter with 6 ft (1.8 m) screened cable Connection: 1/4" - 18 NPT	Danfoss	MBS3000	0-87 (0-6)	91136169
			0-145 (0-10)	91136170
			0-232 (0-16)	91136171
			0-362 (0-25)	91136172
			0-580 (0-40)	91136173
			0-870 (0-60)	91136174

Technical data

Pressure sensor						
Product number	91136169	91136170	91136171	91136172	91136173	91136174
Pressure range [psi (bar)]	0-87 (0-6)	0-145 (0-10)	0-232 (0-16)	0-362 (0-25)	0-580 (0-40)	0-870 (0-60)
Max. operating pressure [psi (bar)]	300 (20.1)	300 (20.1)	750 (51.7)	1450 (100)	2900 (200)	2900 (200)
Supply voltage	9-32 VDC					
Output signal [mA]	4-20					
Insulation resistance	> 100 MΩ at 100 V					
Accuracy, typical +/- FS [%]	0.5 %					
Response time, max. [ms]	4 ms					
Medium temperature range [°F (°C)]	-40 to +185 °F (-40 to +85 °C)					
Ambient temperature range [°F (°C)]	-40 to +185 °F (-40 to +85 °C)					
Wetted parts, material	AISI 316L					
Housing material	AISI 316L					
Enclosure rating	IP65					
Weight [lb (kg)]	0.3 (0.14)					
EMC - Emission	EN 61000-6-3					
EMC Immunity	EN 61000-6-2					
Pressure connection	NPT 1/4-18					
CE-marked	EMC protected in accordance with EU EMC Directive					

Dimensions

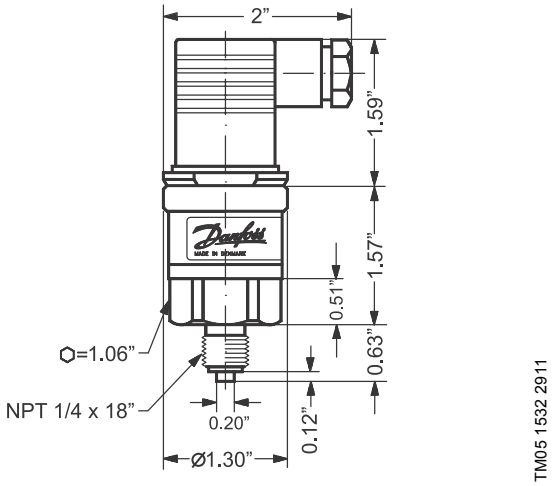

Fig. 56 Dimensional sketch

Grundfos differential-pressure sensor, DPI

Grundfos differential-pressure sensor, DPI	Pressure range [psi (bar)]	Product number
• 1 sensor incl. 0.9 m screened cable (7/16" connections) • 1 original DPI bracket (for wall mounting) • 1 Grundfos bracket (for mounting on motor) • 2 M4 screws for mounting of sensor on bracket • 1 M6 screw (self-cutting) for mounting on 3 Hp and smaller • 1 M8 screw (self-cutting) for mounting on 5-10 Hp • 1 M10 screw (self-cutting) for mounting on 15-25 Hp • 1 M12 screw (self-cutting) for mounting on 30 Hp • 3 capillary tubes (short/long) • 2 fittings (1/4" - 7/16") • 5 cable clips (black) • Installation and operating instructions	0 - 8.7 (0 - 0.6)	96611522
	0 - 14.5 (0 - 1.0)	96611523
	0-23 (0 - 1.6)	96611524
	0-36 (0 - 2.5)	96611525
	0-58 (0 - 4.0)	96611526
	0-87 (0 - 6.0)	96611527
	0-145 (0-10)	96611550

Select the differential-pressure sensor so that the maximum pressure of the sensor is higher than the maximum differential pressure of the pump.

The sensor housing and parts (see fig. 57) in contact with the liquid are made of Inox DIN 1.4305 (pos. 3) with composite PA top (pos. 2). The connections (pos. 4) are DIN 1.4305, 7/16" UNF connection and gaskets are FKM.

A black and screened cable (pos. 1) goes through a screwed connection PG with M 12 x 1.5 connection.

The sensor is supplied with angular bracket for mounting on motor or bracket for wall mounting.

A specially coated silicon chip is used for greater accuracy.

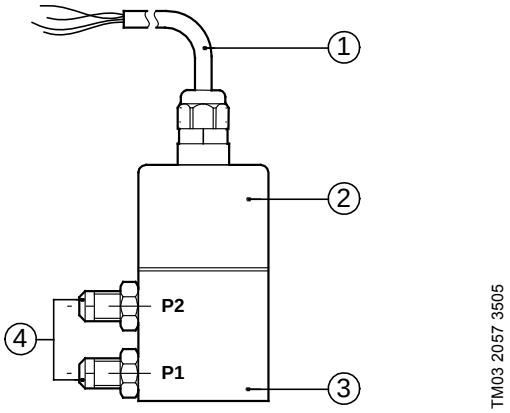

Fig. 57 DPI sensor

Grundfos differential-pressure sensor, DPI							
Product number	96611522	96611523	96611524	96611525	96611526	96611527	96611550
Pressure ranges, differential pressure [psi (bar)]	0 - 8.7 (0 - 0.6)	0 - 14.5 (0 - 1.0)	0-23 (0 - 1.6)	0-36 (0 - 2.5)	0-58 (0 - 4.0)	0-87 (0 - 6.0)	0-145 (0-10)
Supply voltage	12-30 VDC						
Output signal	4-20 mA						
Load [Ω]	24 V: max. 500 [Ω], 16 V: max. 200 [Ω], 12 V: max. 100 [Ω]						
Max. system pressure, P1 and P2 simultaneously [psi (bar)]	232 (16)						
Rupture pressure [bar]	1.5 x system pressure						
Measuring accuracy	2.5 % BFSL						
Response time	< 0.5 seconds						
Liquid temperature range	+14 to +158 °F (-10 to +70 °C)						
Storage temperature range	-40 to +176 °F (-40 to +80 °C)						
Electrical connection	26 GA, 3 ft (0.9 m) cable - M12 x 1.5 in sensor top						
Short circuit-proof	Yes						
Protected against reverse polarity	Yes						
Over supply voltage	Yes						
Materials in contact with liquid	DIN 1.4305 FKM and PPS						
Enclosure class	IP55						
Weight [lb]	1.2						
EMC (electromagnetic compatibility)	According to EN 60335-1						
Emission/immunity	According to EN 61800-3						
Connections	7/16"-UNF						
Sealing material	FKM						

Dimensions

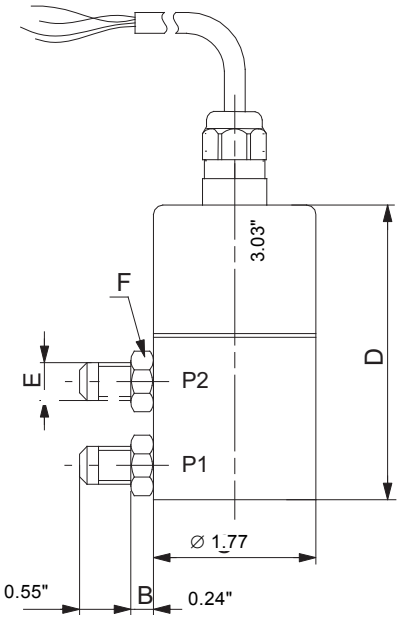

TM03 2059 3505

Fig. 58 Dimensional sketch

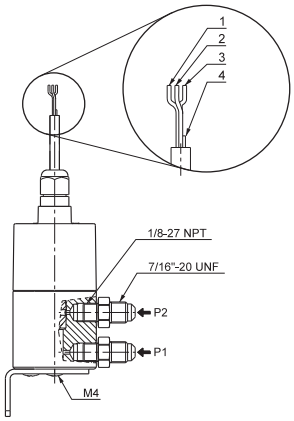

Fig. 59 Wiring

1	12-30 V supply voltage	Brown
2	GND (earth conductor)	Yellow
3	Signal conductor	Green
4	Test conductor (can be cut off during mounting). This conductor must not be connected to the power supply.	White

TM03 2225 3905

Flow transmitters

- Flow tube in AISI 316 mounted with transmitter
- Transmitter AISI 316 L
- 4-20 mA output signal
- 2 x flanges
- 15 ft cable free ends
- Quick Guide.

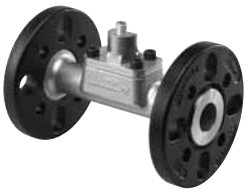

TM04 7362 2210

Type	Flow range [gpm]	Connection	O-ring		Flange material		Product number
			EPDM	FKM	Cast iron	Stainless	
VFI 0.3-6	1.3 - 26	3/4"	•		•		97686127
	1.3 - 2.6	3/4"	•			•	97688293
VFI 0.6-12	2.6 - 53	1"	•		•		97686129
	2.6 - 53	1"	•			•	97688295
VFI 1.3-25	5.7 - 110	1-1/4"	•		•		97686141
	5.7 - 110	1-1/4"	•			•	97688297
VFI 2-40	8.8 - 176	1-3/4"	•		•		97686143
	8.8 - 176	1-3/4"	•			•	97688299
VFI 3.2-64	14-282	2"	•		•		97686145
	14-282	2"	•			•	97688301
VFI 5.2-104	23-458	2-1/2"	•		•		96788476
VFI 8-160	35-704	3"	•		•		97788478
VFI 8-160	53-1060	4"	•		•		97788492

1) For more information about the VFI sensor, see the Grundfos Direct Sensors™ data booklet, publication number 97790189, on Grundfos Product Center, http://product-selection.grundfos.com.

Gauges

Accessory	Measuring range [psi (bar)]	Product number
Liquid filled pressure gauge • AISI 304 (EN 1.4301)/ Copper	30" Hg - 30 psi	91123566
	0-60 (0 - 4.14)	00ID8562
	0-100 (0 - 6.90)	00ID8563
	0-160 (0 -1 1.04)	00ID8564
	0-200 psi (0 -1 3.79)	00ID8565
	0-300 psi (0 - 20.69)	00ID8566
	0-400 psi (0 - 27.58)	00ID8567
	0-600 psi (0 - 41.37)	00ID8568
Liquid filled pressure gauge • AISI 316 (EN 1.4401)	30" Hg - 30 psi	91130835
	0-30 psi (0 - 2.07)	00ID8569
	0-60 psi (0 - 4.14)	00ID8570
	0-100 psi (0 - 6.90)	00ID8571
	0-160 psi (0 - 11.04)	00ID8572
	0-200 psi (0 - 13.79)	00ID8573
	0-300 psi (0 - 20.69)	00ID8574
	0-400 psi (0 - 27.58)	00ID8575
	0-600 psi (0 -4 1.37)	00ID8576

MP 204 motor protector

TM03 1471 2205

Fig. 60 MP 204

The MP 204 is an electronic motor protector and data collecting unit. Apart from protecting the motor, it can also send information to a control unit via GENIbus, like for instance:

- trip
- warning
- energy consumption
- input power
- motor temperature.

The MP 204 protects the motor primarily by measuring the motor current by means of a true RMS measurement.

The pump is protected secondarily by measuring the temperature with a Tempcon sensor, a Pt100/Pt1000 sensor and a PTC sensor/thermal switch.

The MP 204 is designed for single- and three-phase motors.

Note: The MP 204 must not be used together with variable frequency drives.

Features

- Phase-sequence monitoring
- indication of current or temperature
- input for PTC sensor/thermal switch
- indication of temperature in °C or °F
- 4-digit, 7-segment display
- setting and status reading with the Grundfos GO Remote.
- setting and status reading via the Grundfos GENIbus fieldbus.

Tripping conditions

- Overload
- underload (dry running)
- temperature
- missing phase
- phase sequence
- overvoltage
- undervoltage
- power factor (cos φ)
- current unbalance.

Warnings

- Overload
- underload
- temperature
- overvoltage
- undervoltage
- power factor (cos φ)
- run capacitor (single-phase operation)
- starting capacitor (single-phase operation)
- loss of communication in network
- harmonic distortion.

Learning function

- Phase sequence (three-phase operation)
- run capacitor (single-phase operation)
- starting capacitor (single-phase operation)
- identification and measurement of Pt100/Pt1000 sensor circuit.

Product number

Description	Product number
MP 204 motor protection	96079927

Angled cable gland

TM05 0729 1411

Fig. 61 Angled cable gland with O-ring and lock nut

Description	Product number
Angled cable gland with O-ring and lock nut	97842998

20. Submittal data

CM, CME

Company name:

Prepared by:

Phone number: ( )

Fax number: ( )

Date: Page 1 of:

Quote number:

Client information

Project title:	Client name:
Reference number:	Client number:
Client contact:	Client phone number: ( )

Location information

For:	Unit:	
Site:	Service:	
Address:	City:	State: Zip:

Application Information

Operating conditions	Max.	Norm.	Min.	Pumped fluid Fluid type:	Rated	Max.	Norm.
Capacity (gpm)				Fluid temp. (°F) at designated temp.			
Inlet pressure (psig)							
Outlet pressure (psig)				Specific gravity			
Differential head (ft)				Vapor pressure (psia)			
Hydraulic power (Hp) at designated capacity				Viscosity (cp)			
NPSH available (ft)				Fluid ph:		Chlorides (ppm):	

Service

	Hazardous:	Corrosion/erosion caused by:
Continuous	Flammable:	
Intermittent (starts/day):	Other:	

Pump Information

Model information from Type Key and Codes:

Quantity required:

Minimum required flow rate: NPSH required at duty point:

Data booklet or product guide additional information pages

Materials page number: Performance curve page number:

Technical data page number: Motor data page number:

Motor information

Hp: Phase: Voltage: Enclosure:

Custom-built pump information (optional):

Additional information

21. Quotation text

CM, CME

Vertical, non-self-priming, multistage, in-line, centrifugal pump for installation in pipe systems and mounting on a foundation.

The pump has the following characteristics:

- impellers and intermediate chambers are made of AISI _____ stainless steel
- Pump head and base are made of _____
- Power transmission is via cast iron split coupling.
- pipework connections is via _____

The motor is a _____ -phase AC motor

Technical

Rated flow: _____ gpm
Rated head: _____ feet
Minimum liquid temperature: _____ °F
Maximum liquid temperature: _____ °F
Type of shaft seal: _____

Materials

Material, pump housing: _____
Material, shaft: AISI_____ stainless steel
Material, impeller: AISI_____ stainless steel
Material, sleeve: AISI_____ stainless steel
Material, seal metal: AISI_____ stainless steel
- seal face: _____
- seal face _____
- seal elastomer: _____

Installation

Maximum ambient temperature: _____ °F
Max. pressure at stated temp.: _____psi / °F
Standard, pipe connection: _____
Size, pipe connection: _____
Rated pressure, pipe connection: _____ psi
Frame size for motor: _____ NEMA

Electrical data

Motor type: _____
Rated power (P2): _____ Hp
Frequency: _____ Hz
Rated voltage: _____ V
Rated current: _____ A
Service factor: _____
Starting current: _____ A
Rated speed: _____ rpm
Full load motor efficiency: _____ %
Insulation class: _____

Additional

Gross weight: _____ lb
Shipping volume: _____
Model: _____

22. Grundfos Product Center

Online search and sizing tool to help you make the right choice.

http://product-selection.grundfos.com

"SIZING" enables you to size a pump based on entered data and selection choices.

"REPLACEMENT" enables you to find a replacement product.
Search results will include information on

- the lowest purchase price
- the lowest energy consumption
- the lowest total life cycle cost.

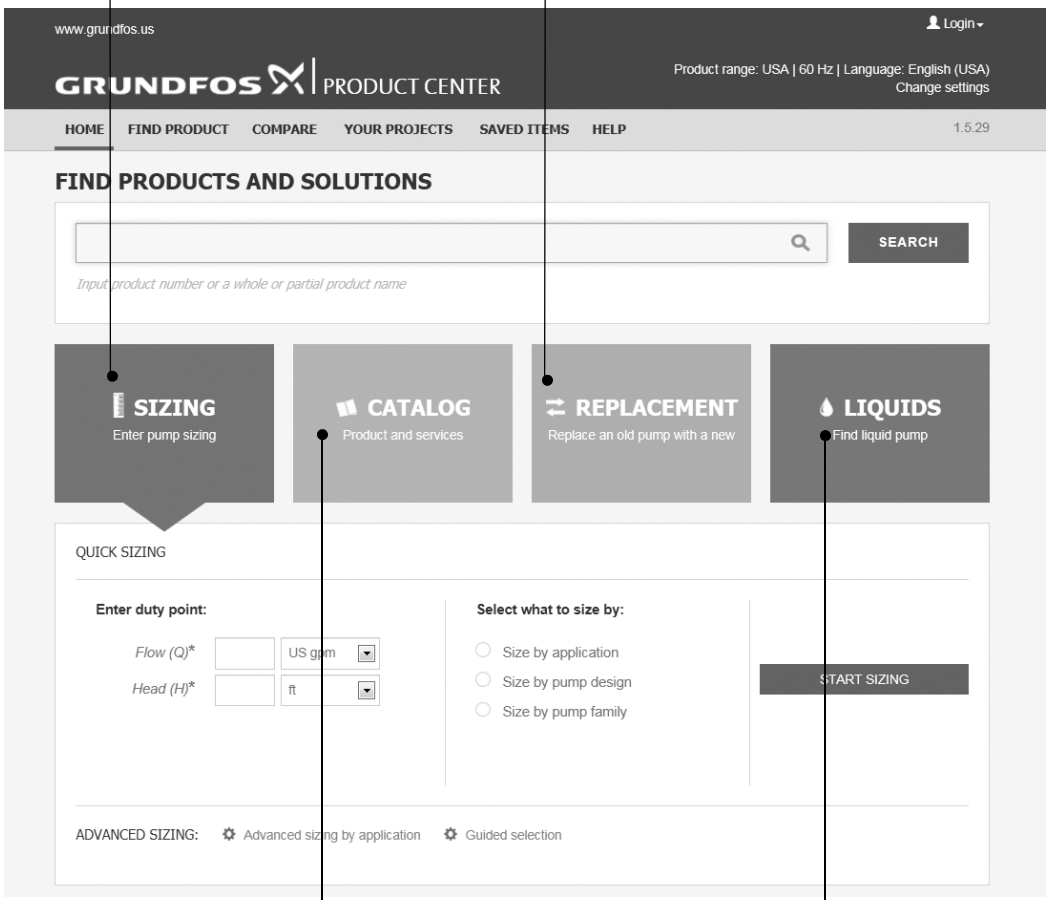

"CATALOG" gives you access to the Grundfos product catalog.

"LIQUIDS" enables you to find pumps designed for aggressive, flammable or other special liquids.

All the information you need in one place

Performance curves, technical specifications, pictures, dimensional drawings, motor curves, wiring diagrams, spare parts, service kits, 3D drawings, documents, system parts. The Product Center displays any recent and saved items — including complete projects — right on the main page.

Downloads

On the product pages, you can download Installation and Operating Instructions, Data Booklets, Service Instructions, etc. in PDF format.

be think innovate

98435269 0418	
ECM:	

Grundfos Kansas City
17100 West 118th Terrace
Olathe, Kansas 66061
Phone: 913-227-3400
Fax: 913-227-3500
www.grundfos.us

Grundfos Canada
2941 Brighton Road
Oakville, Ontario L6H 6C9 Canada
Phone: +1-905-829-9533
Fax: +1-905-829-9512
www.grundfos.ca

Grundfos México
Boulevard TLC No. 15
Parque Industrial Stiva Aeropuerto
C.P. 66600 Apodaca, N.L. Mexico
Phone: 011-52-81-8144 4000
Fax: 011-52-81-8144 4010
www.grundfos.mx

© Copyright Grundfos Holding A/S

The name Grundfos, the Grundfos logo, and **be think innovate** are registered trademarks owned by Grundfos Holding A/S or Grundfos A/S, Denmark. All rights reserved worldwide.

GRUNDFOS